20 CENTS A WEEK WILL INSURE THE DELIVERY OF The Daily Colonist AT YOUR DOOR EVERY MORNING

The Daily Colonist.

20 CENTS A WEEK WILL INSURE THE DELIVERY OF The Daily Colonist AT YOUR DOOR EVERY MORNING

VOL LXXIV.---NO 137 VICTORIA, BRITISH COLUMBIA, SATURDAY, NOVEMBER 16, 1895. THIRTY-SEVENTH YEAR

EBONY GOODS

JUST ARRIVED.

HAIR BRUSHES, MIRRORS,
MILITARY BRUSHES, MANICURE SETS,
CLOTH BRUSHES, BUTTON HOOKS,
VELVET BRUSHES, SHOE HORNS.

These goods are all Solid Ebony and Sterling Silver mounted, and have the finest quality of bristles. We have them in full sets, with cases, and in separate pieces, very cheap. See our Windows.

CHALLONER & MITCHELL,
JEWELLERS, 47 GOVERNMENT STREET.

WE ANTICIPATED

YOUR EVERY WISH IN SELECTING OUR STOCK OF

SATIN... SLIPPERS

IN WHITE, CANARY, CREAM, PINK, BLUE and LAVENDER.

Beautifully Embroidered with Steel Beads and Plain.

A. B. ERSKINE,

Cor. Government and Johnson Sts.

Little Drops of Water

Little savings lay the foundation of a fortune. We are trying to help you to lay the foundation. We expect ours in Small Profits, giving you goods at jobbers' prices.

SOAP The best 15c bar in town. Ross bar, 5c. Elecitric at 65c. a box, or 7 bars for 25c., is very detersive

Our Blend Tea at 20 cents is a cup winner. Those Eastern Oysters, in Tin and Shell, are toothsome. Just in: ONTARIO SWEET APPLE CIDER, by the gallon or bottle, "au naturel."

DIXI H. ROSS & CO.,
127 GOVERNMENT STREET.

FIRE ARMS AND AMMUNITION
CHEAP FOR CASH AT
JOHN BARNSLEY & CO.'S,
Repairs by First-class Workmen. GOVERNMENT STREET.

UNRIVALLED FOR
Richness, Purity,
Fine Creamery Color
And Flavor.

DR. J. HALL,
HOMŒOPATHIST,
Has removed his office to Norwood, Oak Bay avenue, where he resides. Hours the same as usual, 2 to 5 p.m., and in the evenings of Tuesday and Friday 7:30 to 9 o'clock. Sundays and holidays excepted. no1-1m

FOR SALE—A good farm of 237½ acres, 40 thoroughly cleared, near Duncan's Station; price $8,000, including stock, implements and furniture. A. W. More & Co., 70 Douglas st.

REMOVAL NOTICE.

WM. GRIMM, CARRIAGE BUILDER.

Begs to announce to his friends and patrons that he has given up his old stand on Johnson street and REMOVED TO HERALD ST., just below Government street, where he will be glad to see anyone requiring his services. Thanking his patrons for past favors, he begs for a continuance of the same, and trusts that others requiring good work at moderate prices will give him a trial. no5-1m

NEW ADVERTISEMENTS.

WANTED—A situation as general help by experienced girl. Address F.G., Colonist office. no16 2t

WANTED—To buy about 20 acres of land for cash, not more than three miles from city. Address A.B.G., Colonist office. no16 2t

WANTED—A girl to do light housework, only two in family. Apply immediately at 46 Hillside Avenue. no16-1t

WANTED—An assistant to the dressmaking. Apply to Madame Pauline, 37 Fort st. no16 2t

WANTED—Furnished cottage December 15 to March 1. Address Struan, P.O. Box 505. no16 2t

TO LET—That pleasant residence known as "Dallas Bank House," on Esquimalt harbor, with 20 acres of land. Apply Hudson's Bay Co. no16

FOR SALE—Caligraph Typewriter, very cheap; good order. P.F., this office. no16-2t

ST. BARNABAS CHURCH Ladies Aid Association will give a social and concert on Thursday evening, at 8 o'clock. Several prominent local amateurs have promised their services. Admission, including refreshments, 25 cents. no16-2t

IF you want large, pleasant rooms nicely furnished, single or in suite, call at the Sherbrooke, 90 Douglas street. Unfurnished rooms for housekeeping. no16-1t

NOTICE—We are still selling chickens dressed to order at 50c each. Sylvester Feed Co. Ltd., 9 and 10 City Market. no16-1t

IF you want to sell, buy or exchange your books, go to Sampson's Book Exchange, corner Douglas and Johnson streets. Novels sold at half price. no16-1t

POTATOES delivered free to any part of city, 75c per 100 lbs. J. A. Ritchie, Commission merchant, 3 and 5 Store street. no16-1t

TO LOAN—$2,000 for 12 months, at 7 per cent.; first-class security required. Apply Private, P.O. Box 180. no15-3t

THAT PRESCRIPTION

Will be prepared from the purest drugs by a skillful Pharmacist if taken to

JOHN COCHRANE, PRESCRIPTION DRUGGIST

Gold Medallist Ontario College Pharmacy, N.W. corner of Yates and Douglas Streets.

FOR THE NORTH

STEAMER BARBARA BOSCOWITZ

Carrying Her Majesty's Mails, will sail for Fort Simpson, and way ports, via Vancouver, on SATURDAY EVENING, from Porter's Wharf. For freight or passage apply to
CAPT. J. D. WARREN, Manager,
no13 6 Trounce Avenue.

H. CUTHBERT & CO.
AUCTIONEERS,

Owing to the unfavorable weather on Thursday we were unable to finish the

AUCTION
—OF—
FURNITURE
PIANO AND EFFECTS,

advertised for that day, but will continue it on

Tuesday, November 22d

when several other consignments are expected besides the following: English cottage piano (rosewood case), 2 parlor sets, handsome pier glass in gilt frame with marble base, 2 pier glasses in walnut frames, 7 oil paintings and other pictures, Moquet, Brussels and tapestry carpets, curtains, 6 heating stoves (all sizes), 3 cook stoves in good condition, fine solid walnut bed set with marble slabs (a very good one indeed), 4 hardwood bed sets, box and other mattresses, 10 feather pillows and bolsters, blankets, sheets, etc., toilet services, baby buggy, very fine baby cot and hair mattress, capital bed lounge, etc.

This is an entirely new assemblage of household furniture, which has to be sold imperatively without the slightest reserve
HERBERT CUTHBERT & CO.,
no16 Leading Auctioneers.

In the Goods of Carlo Bossi, Deceased.

All persons indebted to the Estate of the late Carlo Bossi, deceased, are required to pay the amount of their indebtedness forthwith to the undersigned, or to Andrea Calvino Bossi, No. 12 Store street, Victoria, B.C., and all persons having any claims against the said estate are requested to send full particulars of their claims, duly verified, to the undersigned, or to the said Andrea Calvino Bossi, No. 12 Store street, Victoria, B.C., before the 15th day of December, 1895

Dated the 15th day of November, 1895.
FRANCIS B. GREGORY,
Board of Trade Building,
Victoria, B.C.
Solicitor for Andrea Calvino Bossi and Americo Vincenzo Bossi, Executors of the Estate of the late Carlo Bossi, deceased. no16-1m

NOT RESPONSIBLE.

BARQUE ARDMORE,
From London. Capt. White.

Neither the captain nor the undersigned will be responsible for any debts contracted by the crew of the above vessel without their written order.
TURNER, BEETON & CO.,
no16 Agents.

New Advertisements Continued on Page Eight

We have some very pretty wrought iron lamps, good designs, well finished articles, and cheap. Weiler Bros. x

"Johannis"

THE KING OF TABLE WATERS.

HUDSON'S BAY CO., WHARF STREET.

CAPITAL NOTES.

Government Not Yet Ready to Pass Over Huddart's Atlantic Mail Service Proposals.

Victoria Pilotage Commission and Harbor Improvements—Fraser River Salmon Eggs for Columbia

(From Our Own Correspondent.)

OTTAWA, Nov. 15.—The government were waited upon to-day by a prominent steamship man representing a syndicate of London capitalists who are anxious to submit a tender for a fast Atlantic service. He stated that the gentlemen whom he represented were willing to undertake the service and were prepared to enter upon the contract forthwith. The Premier informed him that the government would be glad to receive any representations or communications which the syndicate might desire to submit; but so long as Mr. Huddart had any prospect of success, no tenders could be formally accepted from any other syndicate.

The Quebec provincial police who went to the township of Lowe to collect taxes owing for fifteen years wholly failed in their efforts, having been resisted at every turn. Last night their wagons were dismantled, and owing to this and the frightful state of the roads, the police cannot get into the settlement. Owing to the threatening attitude of the residents of Irish descent, and whose "Irish" is up, a formal demand signed by four J.P.'s was made to-night that a detachment of the 43rd battalion be sent in aid of the civil power. Hon. Mr. Dickey, General Gascoigne and officers had a conference to-night and decided to take no action till to-morrow. The affair is creating intense interest in this district. If the militia are sent up, it is feared bloodshed will result.

Owing to Col. Irwin's promotion the duties of Inspector of Artillery for Military District No. 10, Manitoba, and No. 11, British Columbia, will be performed by the Deputy Adjutant Generals of those districts. Instructions concerning the artillery in their commands will be communicated to them through the Assistant Adjutant General for artillery at headquarters.

Matthew Trotter Johnson has been appointed a member of the Pilotage authority for the district of Victoria.

The authorities of the State of Washington have asked for a supply of salmon eggs from the Fraser river hatcheries. They promise to reciprocate some other year.

The government of British Columbia have sent representations to the government of the Dominion for the extension of the wharf at Victoria to deep water to enable steamers more readily to obtain access to it. They also urge a hydrographic survey of Victoria harbor.

MONTREAL MATTERS.

The "Witness" Opposes the Nomination of McShane—Ontario Successful in Disputed Accounts Cases.

MONTREAL, Nov. 15.—(Special) — The Witness violently opposes Mr. Laurier's nomination of Hon. James McShane for Montreal Centre. That paper says if the Liberal party brings out McShane they deserve to be beaten.

The commission on the disputed accounts between the provinces and the Dominion, now sitting in Quebec, having heard both the Indian cases, decided in accordance with the contention of Ontario.

For stealing opium, Frank Martin has been sentenced at Montreal to nine years in the penitentiary,

DURRANT'S CASE.

New Version of the Murders—Why Miss Turner was Not Called to Testify.

SAN FRANCISCO, Nov. 14.—Mayor Sutro has received a wandering letter from Cincinnati signed by Alex. Russ Kershaw, M.D., in which the writer states that he accidentally came into the possession of facts that he claims will lead to the discovery of the murderers of Blanche Lamont and Minnie Williams. Two professional gamblers, he says, committed the crimes, but fear of death at their hand seals his lips. He would be glad to give additional information if he could come to California in safety. The police look upon the letter as the work of a crank.

The attorneys of Theodore Durrant have prepared an affidavit for their client, to be read in support of the motion for a new trial to be made a week from to day. The two principal points on which a new trial will be asked for are the ruling of Judge Murphy as to Juror Brown, who was peremptorily challenged by the prosecution after he had been accepted and sworn, and the refusal to grant a change of venue. The newspapers have been attacked in the affidavit for their alleged persecution of the prisoner, which the defendant's counsel say led to prejudice against Durrant. The prisoner is making himself comfortable in jail, and says he is confident and expects that his case will turn out all right eventually. He has not much hope of a new trial when he comes up for sentence, but thinks the supreme court will give him another trial.

It was a matter of surprise to the public at the trial that Miss Lucille Turner was not called as it was supposed that she would be a very important witness. She testified at the preliminary examination and what she told had weight. However, the officers representing the state decided that her testimony was not needed for the Lamont case; that it would fit in better in the Williams case. Miss Turner's testimony would have shown Durrant to be lacking in delicacy and gentlemanly instincts, and to be an unscrupulous schemer laying traps for his victims. The theory of the prosecution in the Williams case will be that Durrant did plan and scheme to entice girls into the church. The case of Blanche Lamont will be cited as an instance. Then Miss Turner will tell how Durrant, as medical student, offered her medical advice; how he endeavored to get her to enter alone with him the building where Blanche Lamont and Minnie Williams afterwards met their death. She will be the one who will show the motive for the murder of Minnie Williams.

Hood's Sarsaparilla, taken at this season will make you feel strong and vigorous and keep you from sickness later on.

NEWFOUNDLAND TOPICS.

Failure of the Whale Fisheries—Dundee Fleet Caught in the Ice—Union Bank Assessment Resisted.

ST. JOHN'S, Nfld., Nov. 15.—The steamer Aurora returned this morning from the whale fisheries off Davis straits. No black fish were killed, but 750 porpoises were captured. The crew of the Aurora report that the entire fleet met with equally poor success. They got but three whales among them. The Aurora met with most unfavorable weather. She was caught in an ice floe and for a time the crew feared that they would be compelled to abandon her.

This afternoon, while making preparations to discharge her cargo, a fire started in the cabin of the steamer and much difficulty was experienced in preventing it from communicating with the oil tanks, where eight tons of porpoise oil had been stored. Had this oil ignited it would have caused immense destruction and damage to the ships crowded in the harbor. Members of the crew report they saw nothing of explorer Nansen during their trip. They also report that they fear the Dundee whaling fleet has been caught in the ice, and that the boats will be compelled to remain frozen in all winter.

Shareholders of the Union bank, at a meeting held to-day, determined to resist the payment of assessments on their shares called for by the receiver, until the directors have surrendered all their property for the benefit of the creditors of the bank.

GOLD AT ALBERNI.

Mr. Clemes Secures Samples From a Number of Claims—Building Operations Brisk.

Hydraulic Works—Rock From the Yellow Jacket Mine Sent to Victoria.

ALBERNI, Nov. 14.—(via Wellington, Nov. 15)—J. A. Clemes returned from Mineral Hill to day with samples from the Alberni Champion and Missing Link claims.

Work on the tunnel of the Alberni is in thirty feet, and on the Last Dollar twelve feet. About fifty men are working on the hydraulic claims.

Rock from the Printer claim, on Copper Island, belonging to George Brown, assays $6 in gold.

Eight new buildings were contracted for here this week and two livery stables. The hotels are full.

James Brady, M.E, is making a report on a hydraulic claim for Victoria parties.

One ton of rock from the Yellow Jacket claim was shipped to Victoria yesterday.

TIM HEALY SAT ON.

Expelled From the Governing Committee of the Irish Parliamentary Party.

DUBLIN, Nov. 15.—Representatives of the Irish parliamentary party, now meeting in Dublin, by a vote of 33 to 24, yesterday adopted a motion expelling Timothy Healy and Arthur O'Connor from the governing committee of the party. John Dillon, M.P., offered a motion authorizing the chairman of the committee of the party to communicate with the executive committee of the National Federation, with a view to carrying out the suggestion of Archbishop Walsh, favoring the holding of a national convention of the representatives of the Irish race throughout the world. Mr. Dillon's motion was carried.

Tim Healy in an interview declared he did not intend to form a third party, and that he did not expect to belong to any other party, than the anti-Parnellite party, of which he is still a member. This removal from the inner circles and from the various committees, he added, was merely a snub, and would not make any difference in his conduct.

The Times, in an editorial, this morning, says: Timothy M. Healy's acquiescence in his own suppression will hardly be made easier by the triumphant announcement that Thomas Sexton, anti-Parnellite, is to climb back to a parliamentary position, and that the reversion of the leadership is to take place over his prostrate body. With a majority of only nine against him Mr. Healy may hope, if he remains with the party, to soon reverse this vote of expulsion.

U. S. COAST DEFENCES.

Senator Squire Says the United States Must Wake Up to Its Utter Helplessness.

SEATTLE, Nov. 15.—Senator W. C. Squire, chairman of the senate committee on coast defence, who will leave within a few days for Washington, says "this country must wake up to a knowledge of its defenceless condition. Several years ago the senate committee on coast defence recommended the establishment of a cannon factory on the Pacific Coast. Very few people are aware that the old cannon mounted on the sea coast fortifications are useless and are about as effective against modern ships of war as a pistol would be against Gatling guns. There is now only one completed fortification in the United States, supplied with modern guns of heavy calibre, and that is at Sandy Hook. This constitutes the entire modern land defence of the great city of New York. It is true that works of this kind have been commenced at Boston and San Francisco, but the appropriations have been absolutely inadequate for the protection of New York city from destruction by a foreign enemy."

The World's Fair Tests showed no baking powder so pure or so great in leavening power as the Royal.

ACTS LIKE MAGIC.

DEAR SIRS,—I can truly say that Burdock Blood Bitters acts like magic. It drove all the pimples and blotches from my face, cleansed my blood and increased my weight by simply using one bottle.
J. E. EDWARDS, Arnprior, Ont.

GOVERNOR GENERAL'S MEDALS

Presented to Successful Pupils of the Public Schools at the City Hall.

The Children Will Be Given Another Whole Holiday by His Excellency's Request.

The interesting ceremony of presenting to the successful pupils of the public schools the Governor-General's medals took place yesterday forenoon in the city hall. On the platform besides the Governor-General and the Countess of Aberdeen were Hon. Col. Baker, minister of education; Senator Macdonald, the Bishop of Columbia, Lady Marjorie and Hon. Archie Gordon. Capt. Wilberforce, A.D.C., accompanied His Excellency. The room was filled principally with the High school pupils and the first divisions of the graded schools with their teachers, the Mayor and Mrs. Teague, Dr. Pope, superintendent of education; Inspector Wilson and a number of others interested in educational matters.

As the Vice-Regal party entered the pupils sang "God Save the Queen," and Hon. Col. Baker in a few happy words then congratulated the children on having present at the ceremony the Governor-General and the Countess.

Having been requested by Colonel Baker to address the children, His Excellency said:

"Colonel Baker, Mr. Mayor and all young friends:

"My first word must be one of reassurance. I hasten, therefore, to tell you now that I am not going to take the place of the Countess of Aberdeen. Her Excellency and not I will have the pleasure of presenting these medals, and will say a few words to the girls; and that being the case I have no doubt the boys also will listen to what Lady Aberdeen may say. Let me say I fully enter into the feelings expressed, and very considerately and judiciously expressed, by Colonel Baker with reference to what I understand has been a little disappointment with regard to the place of holding this gathering. It seems that the intention was that we should assemble in the Central school, which in view of the circumstances would have been a very natural arrangement, but it turns out that the officials whose duty it is to exercise precautionary supervision in these matters thought it would be safer to meet here. This must not be supposed to imply any reflection on the soundness of the structural work on the school building. If I may say so, in passing, my impressions about such matters as for instance effective flooring, etc, in this city have been of a very favorable kind owing partly to my experience of the admirable floor which was laid in the Drill hall this week by a well known firm of contractors, who I believe have also charge of a large amount of work in connection with that imposing pile the new Government buildings. No, we need not suppose that there have been any shortcomings in the building of the school but rather perhaps that the children of Victoria are so healthy and well grown that the average weight per head of each child amounts to a greater number of pounds than could reasonably have been anticipated by builders in making their calculations. (Laughter.) The town hall on the other hand having been erected for the use of adults is naturally constructed on a scale of even greater solidity.

"At any rate here we are, and though we are sorry to miss seeing the floral decorations with which I understand the children of the school referred to have, under the guidance of Miss Williams and her assistants, very thoughtfully adorned their schoolrooms, yet, after all, this hall is now decorated in a manner which cannot fail to attract, namely, by the bright faces of a host of healthy looking children. And as to the other matter, we shall hope to have a look at the decorated rooms after we leave this building.

"Now, as to the presentation, I think there is something appropriate in medals being the token and badge of success in school work. You will see that these medals are of different material—some silver, some bronze—but that all are alike in this, that they bear the same impression—the same inscription. For one thing they are all stamped with the likeness of the Governor General and the Countess of Aberdeen. It appears to me on looking at the medal that the likeness of the Governor General is rather too flattering. (Laughter.) But I hope that of Lady Aberdeen is sufficiently good to enable you to at least recognize the resemblance. There can be no harm in mentioning that the actual engraving work was done by an engraver who is regarded as about at the top of his profession. The work was done in London, and it is, of course, very natural that London being the metropolis of the British Empire, and in many respects as we think the metropolis of the world, many of the very best professors of various arts, etc., resort there.

"So we may say that though the metal is different the engraving in each case is the same and good. Some children are brighter than others and have more natural gifts. They may perhaps represent the silver. But bronze, too, is a good, solid, sound metal and for some purposes is even more useful than silver. The great point in connection with the medal is the impression that it bears. Now you children are, so to speak, in the hands of the engraver; but there is this difference, that unlike the inanimate metal, you can promote and assist the work of the engraver. I hope you will make the very best use of your opportunities, so that you may more and more receive and bear the impress not merely of attainment but also of character—that true form of capital which does not fail. As to the engravers — those who occupy the exceedingly important position of teachers; one would like to think of them as the agents, the servants, the employes of the Great Master Artificer—the artist of the universe carrying out His work—who mouldeth and fashioneth the hearts of His people.

"Now I am not forgetting what I said about Lady Aberdeen, and therefore I shall add no more, except to warn you that I shall not forget the question of a holiday. We must settle that a little later, but I merely mention it now so that it may be kept in view."

Continued on page Three.

Our Reefers have arrived—Gilmore & McCandless. x

NEWS OF THE PROVINCE.

Ball at Vancouver in Honor of the Governor-General—Nanaimo's Court House.

Gold Washing on the Fraser—Suicide in Jail—Mining at Trail.

(Special to the COLONIST.)

VANCOUVER.

VANCOUVER, Nov. 15.—The St. Andrew's and Caledonia ball, in honor of the Governor-General and Countess of Aberdeen, promises to be very well patronized. It takes place on Monday next.

J. M. Luxton, mineral assayer and metalurgist, has been elected second vice-president of the Northwest Mining Association, recently organized in Spokane.

T. R. Morrow, formerly of Vancouver, now of Rossland, is in the city. He said to your correspondent: "The Trail Creek district is a marvellous country, and there is no object in exaggerating matters. The plain statement of the truth is enough to attract the attention of the world and induce capital to come in for immediate development. Rossland is going ahead very fast. The population is about 2,300, and electric light, telephone and all the modern conveniences are being put in."

Mat Dverak, the Hungarian tailor, who recently attempted to commit suicide but was rescued by police officer McLean, hanged himself in the jail closet last night. Though Dverak was only absent a few minutes he was quite dead when cut down. He tore a sleeve from his coat and tied the knot so that it came behind his neck. His toes almost touched the ground. The suicide was very cleverly done.

WESTMINSTER.

WESTMINSTER, Nov. 15.—It is said that indications are rather encouraging at Eburn, where gold is being bored for.

The Board of Trade and council are acting in conjunction in an endeavor to have the Fraser river surveyed.

A party of ten, headed by Capt. Cooper, have started to wash for gold up the river on the co-operative plan. The scene of their operations will be at various points below Yale.

NANAIMO.

NANAIMO, Nov. 15.—The proposition to establish a business and social club is meeting with hearty approval. This evening's meeting indicated that the idea had taken hold.

P. B. Fowler, of the local staff of the Bank of B. C., has been transferred to Victoria.

The stone carving above the new court house main entrance is rapidly approaching completion. It reflects great credit on the Messrs. Pierce. The subject is a frieze composed of griffins' heads and scroll work after the Romanesque pattern. The keystone will be similarly carved and on either side of the central piece, two shields will appear with the date 1895 inscribed thereon.

BEHRING SEA CLAIMS.

Senator Morgan Claims That in Most Cases Americans Robbed the Rookeries Covered by the British Flag.

LIVINGSTONE, Ala., Nov. 15.—Senator Morgan, chairman of the senate committee on foreign relations, in an interview to the Associated Press to-day in regard to Lord Salisbury's assertion that Senator Morgan's objection to the payment of the Behring sea claims was based on a misaprehension of the facts, said: "I have not seen the dispatch to which attention has been called, but it is impossible to be mistaken in the facts, which stand opposed to the demand of Great Britain for $425,000 damages for the seizure of the vessels arrested during Mr. Cleveland's administration.

"The Behring Sea tribunal, of which I was a member, had no authority to decide any controversy between the United States and Great Britain, that led to the question of damages, or the liabilities of either government for damages for the seizure of ships and they made no such decision, and expressly declined to do so.

"After a thorough examination of the facts presented in the case of the two governments, supported on either side by the testimony of more than ten thousand witnesses, and the diplomatic correspondence from the governments covering the subject, and after listening to the great lawyers who appeared before the tribunal, it is not likely that any member of that tribunal is less informed than Lord Salisbury as to the facts of the case. His Lordship doubtless supposes his information in the facts of this case are quite superior to mine, otherwise he would not attribute to me the grave error of mistaken conception of the facts.

"Evidently he concedes that if I am right in my statement of facts, he must be wrong in claiming that the United States owes Great Britain $425,000 for depredations committed upon British ships poaching upon the seal herds of Behring sea, when the records show that more than half the sum claimed as damages in this case, if due at all, is due to citizens of the United States, who violated the laws of our own country by marauding upon our own seals under cover and protection of the British flag.

"If I should be wrong in uniting with Mr. Bayard and Mr. Blaine in the opinion that these maraudings by British subjects are contrary to public morality and international comity, I think I cannot be wrong in denouncing this conduct of American citizens, under cover of the British flag, as being close akin to piracy, and moreover I cannot be wrong in denouncing the shelter which the British flag gave their people as being an act of arrogance and presumption which scarcely concealed their hostile intentions. I am unable to perceive why the United States government should regard the perpetrators of this base conduct kindly, or should compliment the government of Great Britain by contending it was either just, friendly or otherwise."

Will be found an excellent remedy for sick headache. Carter's Little Liver Pills. Thousands of letters from people who have used them prove this fact. Try them.

When Baby was sick, we gave her Castoria.
When she was a Child, she cried for Castoria.
When she became Miss, she clung to Castoria.
When she had Children, she gave them Castoria.

DISTRESSING PAIN CURED.

DEAR SIRS,—I can recommend Hagyard's Yellow Oil for pain of any kind. It cured me of distressing pain that the doctor could not cure, and my doctor is a good one, too.
MRS. DAVID LABOR,
Waterford, Ont.

MINING IN BRITISH COLUMBIA.

Vast Hidden Wealth—Importance of the Influx of U. S. Capital and Enterprise.

A recent issue of the Canadian Gazette (London) contains the following: "Our columns bear testimony again this week to the important developments in progress in the British Columbia mining industry, and it will be noted how many of the new ventures—some of them as yet, of course, only paper ventures—have their origin in the United States. Mr. Vernon, the agent-general for British Columbia, who has the question of mining under his close attention, says there is no doubt of the importance of this influx of United States capital and enterprise. And, as he points out, it is natural enough. The United States got a long start in British Columbia. The watercourses all run north and south, so do the roads and trails, and until the C.P.R. pierced the previously impassable mountain ranges which cut the rest of Canada off from the Pacific slope, the natural, easiest, and indeed, only outlet for British Columbia was to the South. Especially in Kootenay is United States enterprise dominant, but in Cariboo and Alberni Canadian and British capital is largely concerned, and when good returns are shown from these districts as Mr. Vernon expects they will be before this time next year, it is natural to expect that the attention of British capitalists will be still further directed to the illimitable prospects of the British Columbia mining industry. The detailed report of Prof. Sutton, of the Michigan school of mines, is suggestive of the hidden wealth in Alberni and the whole of Vancouver Island—a district almost at the door of the commercial centres of the province."

Cheering Conservative Meeting.

SMITHS FALLS, Nov. 15.—Hon. Messrs. Haggart, Foster and Montague addressed a meeting of electors here last night and had a most enthusiastic reception. The opera house where the meeting was held could not contain one-fifth of those who sought to enter. An overflow meeting was held in the town hall, which was addressed by the same speakers as at the main gathering.

Cardwell Election Prospects.

TORONTO, Nov. 15.—R. S. White, ex-M.P. for Cardwell, passed through here yesterday for his old constituency to assist W. B. Willoughby the Conservative candidate. He is sanguine that Cardwell will be again carried by the Conservatives.

Killed by a Train.

DESERONTO, Nov. 15.—Peter Merrill, of Deseronto, was killed by a Grand Trunk train. While stepping out of the way of one train he got in front of the other.

Insurance Frauds.

WHITBY, Nov. 15.—Nicholas N. Brown, the Ontario county agent of the Home Life Association Insurance Company was arrested at Whitby last night on a charge of conspiracy to defraud in connection with farmer Alfer, of that place.

A VAST DIFFERENCE.

HOW TO DISTINGUISH THE GENUINE FROM THE IMITATIONS AT A GLANCE.

PAINE'S CELERY COMPOUND "MAKES PEOPLE WELL."

Other Preparations Mislead and Deceive.

There is truly a wonderful difference when the pure, solid, heavy and legal gold coin is compared with the miserable imitation.

The genuine coin is passed with confidence from one person to another; all people believe in it. How is it with the imitation—that spurious coin made and issued by dark and criminal hands? It is made in dark places; it is issued stealthily to deceive and defraud; and all who are connected with the work of deception are ever fearful of the hands of justice.

The genuine gold coin has music and crispness in its ring; the base coin sounds dead and harsh to the ear.

As the genuine gold coin and the imitation differ so vastly, so also is there a world of difference between Paine's Celery Compound and the imitations of Celery that people are frequently deceived by.

Paine's Celery Compound is universally popular owing to its great efficacy; it is hailed everywhere as the great healer of disease; it is recommended by professional men all over this continent; it is genuine, reliable and honest, and "makes people well."

The imitations, and all the crude preparations, are made to sell without regard to results. Deceived buyers are naturally indignant at loss of money and the aggravation of their troubles. When such imitations are used, life is positively endangered.

The genuine Paine's Celery Compound—the kind that cures—is easily distinguished by the words "Paine's Celery Compound," and the "stalk" of celery, found on the bottle and outer cartoon. Look for these special features and you always get just what will meet your case.

PLEASANT AS SYRUP.

Mr. Douglas Ford, Toronto, Ont., states that Milburn's Cod Liver Oil Emulsion with Wild Cherry Bark, is free from objectionable taste, being almost as pleasant as syrup, while for coughs and colds it gives complete satisfaction, acting promptly even in obstinate cases.

SCAVENGERS.

ED. LINES, General Scavenger, 236 Yates street. Yards, etc., cleaned. Orders left at Geo. Munroe, 89 Government street; Speed Bros., cor. Douglas and Fort; or Blair & Gordon, cor. Menzies and Michigan, will be promptly attended to. fe3

CARTER'S LITTLE LIVER PILLS.

CURE

Sick Headache and relieve all the troubles incident to a bilious state of the system, such as Dizziness, Nausea, Drowsiness, Distress after eating, Pain in the Side, &c. While their most remarkable success has been shown in curing

SICK

Headache, yet CARTER'S LITTLE LIVER PILLS are equally valuable in Constipation, curing and preventing this annoying complaint, while they also correct all disorders of the stomach, stimulate the liver and regulate the bowels. Even if they only cured

HEAD

Ache they would be almost priceless to those who suffer from this distressing complaint; but fortunately their goodness does not end here, and those who once try them will find these little pills valuable in so many ways that they will not be willing to do without them. But after all sick head

ACHE

is the bane of so many lives that here is where we make our great boast. Our pills cure it while others do not.

CARTER'S LITTLE LIVER PILLS are very small and very easy to take. One or two pills make a dose. They are strictly vegetable and do not gripe or purge, but by their gentle action please all who use them. In vials at 25 cents; five for $1. Sold everywhere, or sent by mail.

CARTER MEDICINE CO., New York.

Small Pill. Small Dose. Small Price.

Advertisements under the heads of Lost, Found, For Sale or To Let and Situations Wanted will be inserted at the rate of one cent a word each insertion. Payment always in advance. No advertisement received for less than twenty-five cents.

WANTS.

WANTED—500 lots of new and cast-off clothing and shoes at 83 Johnson street. S. Cooness. no15-1m

WANTED—A girl about 16 for general housework. Apply 51 Niagara street. no14-2t

WANTED—An experienced house and parlor maid. Apply to Mrs. Wm. C. Ward, "Highwood," Moss street, between the hours of 12 a.m. to 2 p.m., and 8 p.m. to 6. no14 tf

WANTED—Caretaker for A.O.U.W. hall, woman preferred; without encumbrance. Apply J. D. Warren 6 Trounce Avenue. no14 3t

WANTED AT ONCE—50 men 25 cents an hour at Beaver Lake Waterworks. Walkeley, King & Casey. oc27-tf

TO LET OR LEASE.

TO LET—That commodius two-storey dwelling, with coach house and outbuildings, together with two acres of orchard and garden, situated at the south-west corner of Montreal and Simcoe streets, James Bay. Rental $25 per month. Apply to B.C. Land Investment Agency Ltd. no15-10t

TO LET—Large front single bedroom. 91 Fort street. no15 3t

TO LET—In a most beautiful locality, room or rooms with or without board, for lady and gentleman, or single gentleman; utmost comfort assured; every convenience in the house, which is in thorough order. Anyone desiring a comfortable home cannot do better than address "Cantab," care the Colonist. Prices very reasonable. no13

TO LET—A furnished room with or without board, young lady preferred. Apply 28 Farquhar street. oc13

FOR SALE.

FOR SALE—Handsome and convenient cottage, well laid out grounds, 2 lots, stable, etc; best part of town, healthy, and with beautiful view; cheap; terms easy, owner leaving town. Apply on the premises, corner Belcher Avenue and Cadboro Bay Road. no15-12t

FOR SALE—Stock, fixtures and good-will of the well-known Teutonia Saloon, 112 Government street; a lease will be given to right party. Apply between 10 and 12 in the morning and 6 and 8 in the evening, at 97 Quadra street. no7-1m

FOR SALE CHEAP—Several general purpose horses. The Brackman & Ker Milling Co. Ltd. no13 3t

FOR SALE—Golf balls at $3.75 per dozen. A. W. More & Co., 70 Douglas street.

FOR SALE—5-roomed cottage on Fernwood Road, a bargain for $950; 6-roomed cottage on Pandora street, $1,250; 5-roomed cottage Victoria West cheap at $877; 7 roomed house on Carr street, James Bay, $1,850; 6-roomed house on Cook street, $2,100; 5 roomed cottage on Harrison street, $1,900; 4-roomed cottage on Milne street, $600; cottage on Stanley Avenue, 5 rooms and attic, $2,400; lot on Chestnut street, $200. A. W. More & Co., 70 Douglas street.

FOR SALE—25 pair sashes, 15x36, glazed; also 600 pair assorted sashes, unglazed; cheap, at J. W. Mellor's. oc27

FOR SALE—One of the best farms in South Saanich, on the East road about 10 miles from Victoria Post Office, containing 100 acres; about 50 acres cleared and under cultivation 6-roomed house, good farm buildings; over 200 fruit trees, all first class land; splendid spring of water. The farm is close to the Victoria & Sidney Railway. For further particulars apply to A. W. More & Co., 70 Douglas street. se13

FOR SALE OR TO LEASE—Victoria West Steam Bakery, offering one of the best business openings in B.C. to day. Apply to The Brackman & Ker Milling Co., Victoria. se12

FASHIONABLE DRESSMAKING. Miss Estes, 93 Fort street. no13-7t

WANTED—HELP.

RELIABLE MEN in every locality (local or travelling) to introduce a new discovery and keep our **show cards** tacked up on **trees, fences** and **bridges** throughout town and country. Steady employment. Commission or **salary $65 00** per month and **expenses**, and money deposited in any **bank** when started. For particulars write

THE WORLD MEDICAL ELECTRIC CO.,
oc2-3m London Ont., Canada.

ST. ALICE MINERAL WATER

—FROM—

HARRISON HOT SPRINGS.

THORPE & CO.,

L'T'D L'B'Y,

VICTORIA. Telephone 435. Box 175.

VANCOUVER. Telephone 181. Box 505.

au14-5m

No other Brand has ever attained such an Enormous Sale in so short a time

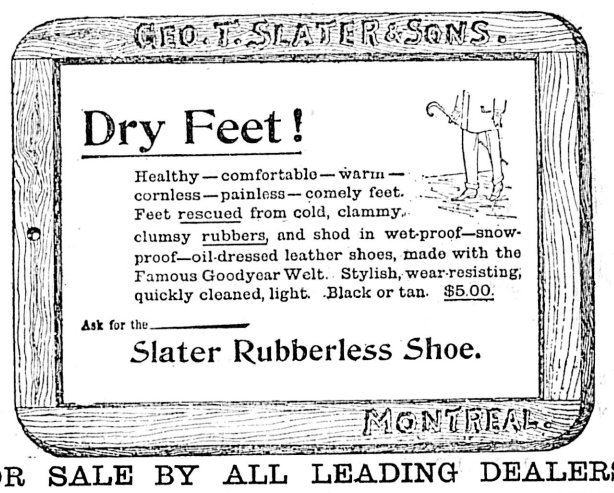

FOR SALE BY ALL LEADING DEALERS.

WELL DRESSED LADIES

Now-a-days have their Skirts bound with

Women are usually anxious to make their money go as far as they can, hence the great popularity of the **CORTICELLI SKIRT PROTECTOR.** It is economical and adds to the beauty of a garment as well.

Sold in 4 and 6 yard lengths. The **Mohair** is in 5 yard lengths.

Can be had in same shades as **Corticelli Sewing Silk.**

CORTICELLI SILK CO., Manufacturers, ST. JOHNS, Que.
oc16-ws-d&w

ADVERTISING AGENCY.

L. P. FISHER, Newspaper Advertising Agent, 21 Merchants' Exchange, San Francisco, is our authorized Agent. This paper is kept on file in his office. fe8

ARCHITECTS.

JOHN TEAGUE, ARCHITECT, CORNER of Broad street and Trounce avenue. Established 1862.

BAKERS.

M. R. SMITH & CO.

Manufacturers of all kinds of Plain and Fancy Biscuits and Cakes, VICTORIA, B. C. fe1

DRESSMAKING.

DRESS AND MANTLE MAKING.

MRS. MARSHALL

has removed to No. 132 Vancouver street where all who require dress and mantle making can have their garments made in the most fashionable style, and perfectly fitted. dec1-tf

ENGINEERS.

KEEFER & SMITH,

CIVIL AND HYDRAULIC ENGINEERS.

Rooms 44 and 45 Five Sisters Block, Government street, Victoria, B.C.

G. A. KEEFER, M.I.C.E. H. B. SMITH, M.I.C.E.

MUSICAL.

PIANOFORTE TUNING.

MR. A. F. OWEN,

Pianoforte Tuner, from J. & J. Hopkinson's, the well-known manufacturer of pianofortes, London, England; 12 years' experience. Particulars as to my ability may be had from the above firm; 3½ years with Goodwin & Co., Victoria. Orders left at Hibben's Bookstore. fe5

PHYSICIAN.

DR. H. J. FLEISCHER, (Deutscher arzt)—Specialty: Surgery and genito-urinary diseases. Office, Gottstein Block, Seattle, Wash. Office hours, 12 to 4 p.m.; Sundays, 12 to 1 p.m. se22-3m

PHOTOGRAPHERS.

MAYNARD'S ART STUDIO, 41 Pandora street. Dealers in all kinds of photographic material, views of British Columbia and Alaska.

Same Block—Maynard's Shoe and Finding Store, 41 Pandora street. Boots, Shoes, Leather and Shoe Findings. "K" boots a specialty. fe1

PAINTERS AND PAPER HANGERS.

R. LETTICE—Dealer in Paints, Oils, varnish and window glass. Agent for Brilliant Sign Letter Co., and Aspenall's Enamel, 40 Fort street. mo17

1895 PENDRAY'S 1896

PRIZE COMPETITION.

20 PRIZES

Will be given for the 20 largest number of Electric Soap Wrappers sent in by October 1, 1896.

1st Prize.....$20.00
2nd Prize.....$15.00
3rd Prize.....$10.00
2 Prizes of.....$ 7.50 each
4 Prizes of.....$ 5.00 "
6 Prizes of.....$ 2.50 "
5 Prizes of.....$ 1.00 "

For particulars and conditions see small bills sent out with all Electric Soap.

TAKE NOTICE—No wrappers of any kind will be eligible unless the name of W. J. PENDRAY is upon them. Refuse any other electric soap, and see that every wrapper has the name of W. J. PENDRAY upon it.

SEQUAH'S . . . . . REMEDIES

Can be obtained from your Chemist.

TAKE NO SUBSTITUTE.

Don't forget, these Remedies have been

PUBLICLY TESTED.

and proved to be superior to any other.

Sold by all Chemists, and Direct from Langley & Co.
se28-eod

SPECIAL.

WHEN ALL OTHERS FAIL CONSULT

Doctor Sweany

RECOGNIZED BY THE MEDICAL FRATERNITY AS THE

LEADING AND MOST SUCCESSFUL SPECIALIST IN THE UNITED STATES.

THE friend and benefactor of suffering humanity, who for a number of years has had permanent offices at Seattle, where the sick and afflicted can receive treatment in the future, as they have in the past, from this noted philanthropist, whose fame is being spread from the Pacific to the Atlantic coast.

All are invited and no Suffering Human Being will be Turned Away.

THE POOR

who call at his offices Fridays are welcome to his treatment free of charge.

What is the Reason of Dr. Sweany's Success, and Why do Sick People of Every Station In Life Crowd His Office Daily?

BECAUSE

First of all he has succeeded in effecting a cure of diseases before which all others stood powerless; and second, he is not only a doctor, but a Christian and a Philanthropist. His fame has preceded him, and the honors he received at the leading Eastern hospitals, as well as in Europe, were the highest ever bestowed upon anybody. To-day his treatment is unsurpassed by any, and he has testimonials to that effect from men of the highest standing in life, as well as from those of a lower station. It is a part of judgment and sense to seek Doctor Sweany first, instead of squandering time and money upon the uncertainties of patent medicines and picayune specialists.

All Private Diseases of Men and Women Positively Cured in the Shortest Possible Time.

YOUNG, MIDDLE-AGED AND OLD MEN

If you are victims of youthful indiscretions and unnatural losses, if you are on the road to idiocy, insanity and the grave, if gloom and melancholy, morbid fear and unnatural lust prevade your mind, if you are despondent and down-hearted, if you have lost all energy and ambition, if you have an aversion to society, if your memory is failing and you are unfit for business or study, you should consult Dr. Sweany before it is too late. Get well and be a man.

DISEASES OF WOMEN.

If you are suffering from any of the diseases peculiar to your sex, you should call or write to Dr. Sweany, and he will tell you just what can be done for you. He has succeeded in building up the most shattered and broken-down constitutions, and will bring back to you that health, strength and beauty which every woman should possess.

You Can be Cured at Home.

There are thousands cured at home by correspondence. Write if you cannot come personally. The strictest secrecy is observed, so cast aside all feelings of shame to consult the Doctor. He is conversant in all modern languages.

Method of Treatment.

No poisonous or injurious mineral drugs used, but the medicines are all compounded from the very choicest, purest and most effective medicinal plants, roots and herbs in the whole range of nature, and while their effects are marked and immediately apparent, they do not build up temporarily, but effect permanent as well as perfect cures.

Office hours 9 to 12 a.m., 2 to 5 and 7 to 8 p.m. Address—

LEVERETT SWEANY, M.D.,
Union Block, 713 Front St.,
au27 SEATTLE, WASH.

GOVERNOR GENERAL'S MEDALS.

Continued from page 3.

The four medals were then presented by the Countess of Aberdeen, a noteworthy fact being that the recipients were all young ladies.

The silver medal, High school, for 1894, was won by Miss Edith Mary S. Shrapnel, who has since gained a first B teacher's certificate; the silver medal for 1895 was won by Miss Francis Ann Brown; the bronze medal for 1894, competed for by boys' school and girls' school, was won by Miss Dorothy Allison; and the bronze medal for 1895, competed for by all the graded schools of the city, was won by Miss Flora Beatrice Rolfe, of the Girls' Central.

These announcements were read by Principal Netherby of the High school, and Miss Williams, principal of the girls' school, and as the young ladies received the medals from the Countess of Aberdeen the assemblage applauded them very heartily.

Then little Ruby Sylvester came forward with a lovely basket of flowers almost as big as herself, and presented it to the Countess. The Governor-General picked the little girl up and stood her on the desk in front of him, and the Countess kissed her, and with a few pleasant words returned her to the floor. Her Ladyship then addressed those present as follows:

"*Your Excellency, Colonel Baker, Mr. Mayor, Ladies and Gentlemen:*

"I am acting under authority to-day, children, as the deputy of His Excellency, who supports Colonel Baker in abusing his authority. (Laughter.) Colonel Baker found out last year that I was amenable entirely to his authority, and so this year he has exercised it again, and having appealed to His Excellency, His Excellency has appointed me as his deputy in giving these medals to the four young ladies who have so distinguished themselves this year and last, and to whom now I would like again to offer my most hearty congratulations for what they have achieved. And I have also to congratulate all the girls in Victoria, and may I say also all the scholars in Victoria (applause), because I am sure that the boys will accept the girls as their representatives on this occasion. Well, young ladies, why do we congratulate you so heartily to-day? I think there are several reasons why I should specially like to congratulate you.

"First of all, because of the very great pleasure that you have thus been able to give to your parents and friends. When children are able thus to carry away honors which have been rightly gained they scarcely know what a wonderful amount of pleasure they give to their parents and friends, for the record of a childhood given to solid good work is a great possession for a family and a great promise for the future. I congratulate you therefore in the first place on the great honor you give to your families, and the pleasure you have given to those for whom you most care and to whom you wish to give this delight.

"Secondly, I should like to congratulate you because I think these medals are the proof that you have acquired to that which is after all the great object of your education, and that is the power of working—the knowledge of how to work. I think that your teachers would agree in saying that after all it does not so much matter what knowledge you have attained as to know how to work and how to learn. We may believe that these medals represent not weeks or months but years of work—of bright work, steady work, hard work—and looking back you can, I suppose, remember times when preparing your lessons or doing some exercise that you were tempted not to give your whole minds to work, and you can also remember how you put away that temptation. And now you are able to realize that it is by long continued exercise in this direction that you have gained the distinction which is yours to-day, and are as examples to others that if success is to be attained it must be by continued, persistent effort. That is the great lesson which we want boys and girls nowadays to learn—how to work; how to concentrate their attention; how to give their whole selves to everything which they take up. It is thus that they will become able to succeed in every walk of life which they may choose, and certain to reflect credit upon themselves, their families, and upon all with whom they have to do. (Applause.)

"Thirdly, I should like to congratulate you upon the opportunity this affords you of doing credit and honor to the schools where you have been trained. (Applause.) I know you are proud of your country and province, and of Victoria, and of the schools where you are receiving your education. But nowadays you must be prepared to do even more than this. I know that in times gone by those who have won the Governor General's medal in Victoria have distinguished themselves in various stations of life, and their record is held up to those who have succeeded them. It is for you four young ladies to take care of that record—to take care that it shall be an untarnished record—that not only you show that you have profitted and gained knowledge, but that you shall show that you can use that knowledge and training in the best possible way. Sometimes people think of schools as if they were places where they were to get all they can, and do not remember that they too should give something. It is well to know on the authority that the public schools of British Columbia are doing good and satisfactory work; but if they are to continue doing better and better you must bear in mind that it does not lie altogether with those who manage those schools. The Minister of Education may continue to do all that is best; the school trustees may try to do all that they can for the welfare of the children; and the teachers may do their best work and give you the best teaching within their capabilities—but if the scholars do not do their part it will be impossible to keep the schools up to the highest level, and up to the mark in every way. Every child must remember that that child has something to do with keeping up the efficiency and high tone of the school to which it belongs. (Applause.) You know, children, well enough each of you how every scholar has an influence on those around. If a boy or girl is idle or inattentive you know how those around are disturbed. Or if a scholar is given to vulgar talk how that affects those with whom such an one is brought into contact is also known to you. You know, too, how if a boy or girl is thoroughly determined to do the highest kind of work that such an example is the best kind of an incentive to his or her companions. (Applause.) And if a scholar is thoroughly loyal to the teacher and to the school and system this, too, helps and gives a high tone and leaves an impress not only on their own companions for the time being, but also on the school long after they have left. (Loud applause.)

"And so children if you want, as I am sure you do, to make the schools of Victoria celebrated for turning out boys and girls who will serve their country and so act as they were meant to do—who will show that they have had thorough training and good discipline and learned the lesson of self-control, and have gained a high ideal of what education and culture mean—then, children, each one of you must try to keep up the public feeling in your school to the highest possible level. You must never let a word be said that you would be sorry to repeat to your parents or teachers. (Applause.) You must never let anything dishonorable be said or hinted at in any way that you can help, and you must never forget the great influence that you exert on all those around you. Even those of you who are quite little ones must remember this. You can each do a great deal in this way by beginning at the very first to do your lessons as well as ever you can—as thoroughly as you can—and by trying to help those about you to do this too, by doing your duty as well as you possibly can; then the schools of Victoria will not only be a glory to this city and province, but to the whole country.

"Ladies, again I beg to congratulate you for having won these honors, and I trust that your future may be a bright continuation of to-day." (Great applause.)

The Bishop of Columbia, at the request of Hon. Col. Baker, also spoke briefly to the children. He preferred, he said, to address his remarks to those who had not succeeded in winning the medals and to the boys in particular. The real ideal he held up to the boys was to be gentle to others, and that was something they could all aspire to and succeed in. To become true followers of Christ was better than the mere scoring of marks.

Hon. Col. Baker was sure that the one thought of all the children was to thank the Governor General and Lady Aberdeen for being present, and concentrating that wish into one heart and voice he expressed those thanks for them.

The Governor-General in acknowledging this expression of good will asked for a holiday for the schools. He would not be put off with the information that the present was a holiday, and in deference to His Excellency's wishes, Hon. Col. Baker announced that the day after Thanksgiving day, (Friday next) should also be a holiday. This the youngsters greeted with vociferous cheers and the singing of the national anthem brought the proceedings to a close.

Before leaving the hall the teachers were presented to the Governor General and Lady Aberdeen, and were specially invited to attend the reception at Government House in the afternoon.

The reception at Government House was an informal one, and was very largely attended. The Countess of Aberdeen received the guests as they arrived and she and the Governor General went about the rooms chatting with the ladies and gentlemen present, and took an evident pleasure in seeing that the guests were enjoying themselves.

At 3 o'clock the Countess of Aberdeen addressed the King's Daughters at the city hall, Mrs. Maitland Dougall, of Cowichan, secretary for the province and other ladies greeting her on her arrival. A pretty feature of the afternoon was the presentation to the Countess of a beautiful basket of flowers by little Miss Dorothy MacTavish, a six year old tot that had been made a King's Daughter that afternoon.

To day the Governor General and Lady Aberdeen visit a number of the manufacturing and industrial establishments in the city, and this evening a state dinner will be given at Government House.

THE "STRATHNEVIS'" LONG VOYAGE

Leaving This Port on October 12 She Has Not Yet Reached Yokohama.

No word has yet been received of the arrival at Yokohama of the Northern Pacific steamship Strathnevis, which left Victoria for the Orient on October 12. She departed from here two weeks before the steamship Victoria, a vessel of the same line, which reached the Japanese port a few days ago. Notwithstanding this fact there is no particular uneasiness felt for the overdue ship. She is a new vessel and is lightly loaded; not only this, but Captain James Pattie, her skipper, on leaving here declared that the trip would be a 30-day one. The Strathnevis' machinery was not, it is said, in very good running order, and bad weather such as is to be looked for on the Pacific at this season, has no doubt retarded progress on the voyage. The Strathnevis carries a cargo of 2,000 tons of general freight consisting of the usual assortment of canned meats, condensed milk, machinery, iron pipe, etc., and including 1,800 kegs of nails. These nails were destined for Japan and were of a peculiar character, being short and light and adapted for use in bamboo work. The ship carried besides 125 Chinese passengers, mostly Eastern merchants. While essentially a cargo steamer and shorn of all decorations or useless houses the Strathnevis is considered a good vessel. Her lines are good, and in appearance she realizes the ideal of the modern fast freighter. Six thousand four hundred and twenty tons of Oriental freight were brought by the vessel in July—the largest Asiatic freight ever landed on the Pacific Coast. The Strathnevis is commanded by Capt. James Pattie. She belongs to the "Strath" line of Glasgow, and is one of the thirty-three steamships owned by that company. She has a net tonnage of 2,303, a gross tonnage of 3,574, and a dead weight carrying capacity of 5,700 tons.

If sick headache is misery, what are Carter's Little Liver Pills if they will positively cure it? People who have used them speak frankly of their worth. They are small and easy to take.

FORT WILLIAM, ONT.

Mr. William Day, of Fort William, Ont., says: Two years ago my wife was very ill with Dyspepsia. No remedy that she could find gave any relief. Finally she tried Burdock Blood Bitters, and after taking six bottles was entirely cured. That is now more than two years ago and she has had no return of the malady. I also have had occasion to use B.B.B., and I cannot speak too highly in its favor. I always recommend it to my friends, and in every case with good results.

Yours very truly,
WM. DAY.

Sheffield pocket knives, table cutlery, warranted shaving outfits, and razors at Fox's, 78 Gov't St. x

After the wedding come the wedding cards—those dainty souvenirs of the happy day. Don't forget that the only complete stock of this kind of stationery in the city is to be seen at the Colonist office. An inspection invited. x

E. M. JOHNSON

37 Government Street, Corner of Broughton.

ESTABLISHED 1879.

Real Estate Agent, Conveyancer and Notary Public

Loans Effected, Rents and Income Collected, Deeds Prepared, Etc., Etc.

FOR SALE--20,000 ACRES FARMING LAND

In contiguous Blocks; Beautifully watered; forming one of the finest estates in the Province; house and farm buildings, 2000 cattle; 50 to 80 horses; easy approach; good roads; railways projected to property and the estate is in close proximity to some of the best developed, most promising gold mines in the District. The price of the whole is extremely moderate. Principals only treated with.

FOR SALE---1388-ACRE FARM

About 1000 Acres of which is Ploughable Prairie of First-class Quality.

120 Head Cattle 1 pedigree Hereford Bull.
12 Horses.
Ploughs, Harrows, Reaper, Wagon, Sleds and usual Farm Implements.
Double Harness, Chain Harness, Bull Chains, Saddles (ladies and gent's), Bridles, etc.
Blacksmiths' Bellows, Anvil and Tools and Carpenters' Tools.
9-Room House (shingle roofed; Stable for 10 horses, with hay loft above; Stone Roothouse, Store Buildings, Dairy, Cow Sheds, etc., etc.
7 Miles (about) Standing Fences, in good order; Corralls, &c.
Small Lot Household Furniture, Stove and Pipes, Cooking Utensils, Crockery, etc., etc.

This Property is within easy distance of many of the most important Gold, Silver and Coal Mines in West Kootenay. The soil is the best bottom land, and the locality is one of the few places in the Province where so large a piece of good farm land can be found in one block. A river runs through the property, and rainbow trout are plentiful and afford capital sport. Deer abound in considerable numbers. Bear, Wolf, Coyote and other large game are to be found in the hills. There are two creeks recorded and belonging to the estate, one flows all the year round. Limestone and brick clay are to be had in the valley.

The Cattle are well bred; a much larger herd could be farmed with the place. The bunch grass on the hills in the vicinity covers many thousands of acres, and is available to the few land owners in the valleys.

The Climate is not severe, the station was for many years the winter quarters of the H. B. Co.'s pack trains.

The Title is Crown Grant. Immediate possession can be given.

The South West Kootenay and Osoyoos Divisions of Yale District, British Columbia, judging from the actual ore products of the mines to date, are destined in the next year or two to be the richest and most important mineral centres in the world.

These localities are rapidly settling up and as farm land is limited great inducement is offered to any person or corporation having capital and knowledge necessary to develop and work these estates. A store, hotel and blacksmith shop could be run in connection with the farm.

P. O. BOX 188. TELEPHONE NO. 74.

A Blizzard!
A Hurricane!
A Cyclone!
A Tornado!
Wouldn't be enough to extinguish E. B. Eddy's
"Flamers"
when lit.
The best "light" for smokers in these high autumn winds
Made only by
The E. B. EDDY Co.
LIMITED
HULL.

HARDWARE SPECIALTIES.

Enterprise Raisin Seeders
Meat Cutters, Enamelled and Tinned
Dietz Tubular Driving Lamp
Marty's Rat and Mouse Traps.
Sargent's Wood and Iron Planes
Miller Padlocks and Night Latches (non-pickable)
Ship Augers and Bits
Chain Cow Ties
Also a full line of Shelf and Heavy Hardware, Wagons and Farm Implements,

FOR SALE BY

E. G. PRIOR & CO., LTD LBY.

VICTORIA, VANCOUVER and KAMLOOPS.

CHAS. HAYWARD,
Funeral Director & Embalmer
52 GOVERNMENT STREET, VICTORIA.
★★
The largest and best appointed Undertaking Establishment in the Province.

PROPERTY SALE.

Victoria City Lots 1570 and 1571, with Brick Cottage and Storey-and-a-Half Dwelling, Etc., Thereon.

The above property will be sold by tender, under the power contained in mortgage registered in Charge Book vol. 13, folio 465, No. 89D. Tenders to be sent in by 12 noon, on the 16th day of November, 1895, addressed to the undersigned, who will allow inspection of titles and mortgage and furnish all information.

If the mortgage be not paid off before above mentioned time limit, the highest tender, above principal and interest due, and other lawful charges, will be accepted.

E. M. JOHNSON,
Real Estate Agent,
Corner Government and Broughton Streets,
Agent for the Mortgagee.

Dated at Victoria, B.C.,
October 30th, 1895. oc30-td

THE BRITISH COLUMBIA EXPRESS CO'Y, LTD.

STAGES FOR CARIBOO

The regular Weekly Stage for all points in Cariboo and Lillooet,

Leaves Ashcroft every Monday morning at 4 o'clock. Travelling by daylight only and making about 70 miles a day, each way, lying over one day at Barkerville.

Ashcroft to Clinton,

Mondays, Wednesdays and Fridays. Returning Tuesdays, Thursdays and Saturdays. Ashcroft for Lillooet, Mondays and Wednesdays.

Special Stages

Furnished on proper notice and at reasonable rates. For a party of five or more persons, regular stage fares only will be charged. These specials make regular stage time, changing horses along the route. General express matter carried by regular stages. Fast freight by specials.

For further information apply to
B. C. EXPRESS CO., LTD.,
jo6-d&w-tf Ashcroft, B. C.

BANK OF BRITISH COLUMBIA.

(Incorporated by Royal Charter, 1862.)

CAPITAL (with power to increase)	£600,000	$2,920,000
RESERVE	£235,000	$1,143,666

HEAD OFFICE - - - 60 LOMBARD STREET LONDON, ENGLAND.

BRANCHES:

IN BRITISH COLUMBIA—Victoria, Vancouver, New Westminster, Nanaimo, Kamloops and Nelson (Kootenay Lake.)

IN THE UNITED STATES—San Francisco, Portland, Seattle and Tacoma.

AGENTS AND CORRESPONDENTS:

In Canada—Canadian Bank of Commerce, Merchants' Bank of Canada, The Molsons Bank, Imperial Bank of Canada, Bank of Nova Scotia, and Union Bank of Canada. **In United States**—Canadian Bank of Commerce (Agency) New York, Bank of Nova Scotia, Chicago. **In Australia and New Zealand**—Bank of Australasia. **In Honolulu**—Bishop & Co.

SAVINGS BANK DEPARTMENT. Deposits received from $1 upwards, and interest allowed (present rate) at 3 PER CENT. PER ANNUM.

Gold Dust purchased and every description of Banking Business transacted.

Victoria, B.C., July 1, 1893. GEO. GILLESPIE, MANAGER.

PAPER CUTTER KNIVES

and KNIVES OF PLANING MACHINES up to 60 inches in length can be ground on an AUTOMATIC KNIFE GRINDING MACHINE in the Engine Room of The Colonist Office.

The Colonist.

SATURDAY, NOVEMBER 16, 1895.

PUBLISHED EVERY DAY EXCEPT MONDAY BY THE COLONIST PRINTING & PUBLISHING COMPANY, LIMITED LIABILITY.

W. H. ELLIS, Manager. | A. G. SARGISON, Secretary.

TERMS:

THE DAILY COLONIST.

Per year (postage free to any part of Canada) $10 00
Parts of a year at the same rate.
Per week (if delivered) 20

THE SEMI-WEEKLY COLONIST.

PUBLISHED EVERY MONDAY AND THURSDAY

Per year (postage free to any part of the Dominion or the United States) ..... $ 1 50
Six months 75

Subscriptions in all cases are payable *strictly in advance.*

ADVERTISING RATES:

REGULAR COMMERCIAL ADVERTISING as distinguished from everything of a transient character—that is to say, advertising referring to regular Mercantile and Manufacturing Business, Government and Land Notices—published at the following rates: Per line, solid nonpareil, the duration of publication to be specified at the time of ordering advertisements:

More than one fortnight and not more than one month, 60 cents.

More than one week and not more than one fortnight, 40 cents.

Not more than one week, 30 cents.

No advertisement under this classification inserted for less than $2.50, and accepted only for every-day insertion.

Theatrical advertisements, 10 cents per line each insertion.

Advertisements unaccompanied by specific instructions inserted till ordered out.

Advertisements discontinued before expiration of special period will be charged as if continued for full term.

Liberal allowance on yearly and half-yearly contracts.

WEEKLY ADVERTISEMENTS—Ten cents a line solid Nonpareil, each insertion. No advertisement inserted for less than $2.

TRANSIENT ADVERTISING—Per line solid nonpareil—First insertion, 10 cents; each subsequent consecutive insertion, 5 cents. Advertisements not inserted every day, 10 cents per line each insertion. No advertisement inserted for less than $1.50

Births, Marriages and Deaths, $1.00; funeral notices, 50 cents extra.

Where cuts are inserted they must be ALL METAL—not mounted on Wood.

ENCOURAGE THE HOME PRODUCER.

A month or so ago a movement was set on foot in Seattle to encourage the consumption of home-manufactured and home-grown commodities. Householders and others signed an agreement to give preference to home-made goods. This was a praiseworthy movement, and it would be well for British Columbia if a similar one were set on foot in this Province. The country being new and its industries struggling hard to maintain an existence, it is only right that its inhabitants, whenever they can do so without incurring serious loss, should give those industries a helping hand. If British Columbians do not aid British Columbian industries, who can be expected to give them a lift?

A great deal can be done in this way by Government, by corporations and by individuals. If the Government's officials, when supplies of one kind and another are wanted and work to be done, would look around them and see if home-made goods and home-produced material could not be procured at pretty nearly the same rates and of as good quality as those of foreign manufacture and foreign production, they would do much to foster home industries. If the Corporations of Victoria and other cities acted in the same way they would, without doing those whom they represented and for whom they were acting the slightest injury confer a very considerable benefit on men and women in British Columbia who are trying in the face of difficulties and discouragements to establish industries in the Province and to develop its resources.

Individuals can do even more in this direction than even governments and corporations. If every housekeeper, let his or her means be great or small, kept continually in view the encouragement of the home producer it would be astonishing what an impetus would be given to home industries. Many, we are glad to be able to say, do this already, notably the late Premier of the Province and present Chief Justice. He, we are told, in all his dealings, whether official or private, made a point of preferring the products of the province to those produced elsewhere. In this he acted the part of a true and a judicious friend of British Columbia. If the inhabitants of the province generally acted on this principle there would be fewer complaints among the home producers and those who have money to spend would have the satisfaction of knowing that the greater part of their expenditure went to increase the prosperity of the Province.

A GREAT IMPROPRIETY.

The scene in the Court House in Vancouver when the verdict of "not guilty" was returned in the Smith murder case was not creditable to the citizens of that city. We are not surprised that the judge was indignant and expressed his feelings emphatically when amid the noisy plaudits of the spectators the prisoner offered to shake hands with the jury that had acquitted him. Such scenes in a Court of Justice, under any circumstances, are to be deplored, but the circumstances of this case were such that the community has little cause to rejoice that such a man as Smith has shown himself to be should have reason to feel that he has with him the sympathy of respectable, law-abiding members of society. It is but reasonable to conclude that the liberated man left the Court feeling himself quite a hero. He will very likely be proud of what he has done, and it will not be at all surprising if some other man of the same type, believing that he has been wronged in the same way that Smith was, will take the law in his own hands and murder, it may be, an innocent and unoffending man.

The administration of law, particularly in criminal cases, should always be serious and impressive, and the decencies of a Court of Justice should be always strictly observed. Appearances are more important than most people imagine. Where crime in a Court of Justice is treated with levity, and when a mixed audience see a criminal applauded, many of those who compose it will be led to think lightly of crime and many perhaps may envy the prisoner who at the moment of acquittal is apparently honored by men whose approbation they highly value. We trust that most of those who in a moment of excitement were surprised into expressing pleasure at the acquittal of Smith will by this time be ashamed of what they have done and will be ready to admit that the exhibition was most unseemly and calculated to have a pernicious influence.

A BURLESQUE.

It is greatly to be regretted that the members of the City Council have so little respect for the citizens whom they are supposed to represent as to make the Council Chamber a place of amusement for men and boys who want to have an hour's fun without paying anything for admittance. It is evident that the audience in the City Hall on Thursday night expected a little diversion, and they were not disappointed. The whole performance appears to have been a complete burlesque on the proceedings of city councils. If some of the members of the Corporation had been paid handsomely for making the office of City Councillor appear ridiculous in the eyes of the public they could not have done the work more effectively than they did. As actors, their performance was highly creditable, showing that they possessed no small degree of histrionic talent. As a meeting of men having serious business to transact their behavior was simply disgraceful. It is humiliating to think that the men to whom the citizens of Victoria have entrusted the management of their civic affairs have not a higher sense of duty and more respect for their office and themselves than to make their meeting an exhibition for the amusement of the crowd. The audience, we infer, from the demonstrations that they made, heartily enjoyed the amusement prepared for them by the Councillors, but what was fun for them ought to be death for the performers in their official capacity.

AN UNLIKELY STORY.

All sorts of rumors are in circulation about the reconstruction of the Government. One of them is that Chief Justice Meredith will resign his position on the Bench to become Premier of the Dominion. This is a most unlikely story, yet it is believed by many. This is how the Ottawa Citizen deals with this rumor:—

Some of our Toronto contemporaries are again canvassing the name of Chief Justice Meredith as a desirable addition to the Dominion cabinet. A year and a half ago the electorate had the opportunity of making him Premier of Ontario, but they chose not to do so. We should like to have seen him come to Ottawa in default of success in the Provincial arena; but, instead of this, he was placed upon the bench. And once having taken his seat there he should never again take part in politics.

The theory of those who are now discussing him are that the Dominion Government is in danger of being beaten in Ontario, and that the Chief Justice would bring such strength to it as to avert disaster. We do not accept the assumption of probable defeat. Admitting it, however, for the sake of argument to be true, the remedy appears to us worse than the disease. The success of the present Opposition is undesirable; but it is of far more importance that the judiciary should be free from the suspicion of partisanship than that any set of men should retain office.

To enjoy this immunity it is essential that when a man ascends the bench he shall be considered as having abandoned politics forever.

The Toronto World, it appears, has been chiefly instrumental in spreading the report that the Hon. William Ralph Meredith, Chief Justice of the Common Pleas for Ontario, might, could, would or should step down from the Bench to enter the Federal ministry. In giving the appearance of probability to this sensational piece of news the World acted most injudiciously. We do not believe that there was any more solid foundation for it than the desire of a few Conservatives who allowed their imagination to get the better of their judgment. Mr. Meredith makes an excellent judge. He enjoys the confidence of the men of Ontario of all parties, creeds and classes. He has done yeoman's service to the Conservative party and he nobly deserves the honors, the privileges and the immunities of his present position; but it is not likely that there are any number of influential Conservatives in the Dominion who would think seriously of asking him to leave the restful position in which he has just been placed again to take upon himself the responsibilities and cares of a political leader.

THE NICARAGUA CANAL.

There is again talk of constructing the Nicaragua Canal by private enterprise. The American politicians are so dilatory, so jealous of each other and so devoted to the interests of railway companies and other corporations, that they cannot be induced to give this great enterprise the national aid that it requires and which it is evidently the interest of the United States to give. Yet as soon as there is any serious talk of building the Canal independently of the United States Government American newspapers set up a cry that the Canal when constructed must be under the control of the United States. The dog-in-the-manger attitude assumed by many of those papers is well illustrated by the following extract from the San Francisco Call:

The connection of the waters of the Atlantic and Pacific oceans is by far the most important measure now under the consideration of the American people. The completion of the canal will open the way from one ocean to another not only to merchant vessels, but to vessels of war. Should a hostile fleet ever cut American communication between the two oceans the Pacific coast would be at the mercy of the power in control of such fleet. American vessels of war desiring to pass from the Atlantic to the Pacific coast or from the Pacific to the Atlantic would be compelled to take the Cape Horn route, while our enemies would steam through the canal in fewer days than the Cape Horn route would require months. The proposition to make the canal neutral territory may be classed with other altruistic schemes. When war comes nations strike where the blow will be the most effective. This generation has seen England in full possession of the Suez Canal in spite of treaties. Self-preservation is as clearly the first law of nations as of nature. With thousands of miles of coast on each side of the continent the United States should permit the opening of the canal only on condition that she should control it. In times of peace it should be open to all nations on equal terms; in times of war it should be held to the exclusive use of the nation whose territory occupies the central portion of both shores. A canal built in part with foreign capital cannot be so held without confiscating property rights. Even with such confiscation it might be impossible to so fortify the canal that a hostile fleet could not pass through it. Another purpose of the canal is to create a standard of transportation charges. This could be entrusted to no private corporation.

If absolute control of the Nicaragua Canal is so necessary to the United States, why in the name of common sense does not the United States undertake not only to construct it, but to get possession of the territory through which it is to run? On no other condition than this will the nations of the world permit the United States to have complete control of the Canal in time of war.

If the Canal were constructed as a merely commercial enterprise with money contributed by the capitalists of all nations, it would be easy to make international arrangements with respect to its navigation at all times, in times of war as well as in times of peace. If the canal is not to be built until the nations of the world consent to place it completely under the control of the United States, the probability is that it will never be constructed. If our exacting and jealous neighbors dilly-dally much longer with the project, or if they assume the attitude with respect to it foreshadowed by our San Francisco contemporary, the Panama Canal project will be revived and carried out in spite of the opposition of domineering Americans.

"Turn the rascals out"—the familiar party cry—may be applied to microbes as well as men. The germs of disease that lurk in the blood are "turned out" by Ayer's Sarsaparilla as effectually as the old postmasters are displaced by a new administration.

"LYNWOOD" at A. O. U. W. hall, Saturday. x

Bordered Hemp mattings at Weiler Bros., suitable for stairs, passages, etc. x

"WORTH A GUINEA A BOX."

BEECHAM'S PILLS

(Tasteless—Effectual.) FOR ALL

BILIOUS and NERVOUS DISORDERS,

Such as Sick Headache, Weak Stomach, Impaired Digestion, Constipation, Liver Complaint, and Female Ailments.

Covered with a Tasteless & Soluble Coating.

Wholesale Agts, Evans & Sons, Ld, Montreal. For sale by all druggists.

HATS! HATS! HATS!

FOUR CASES

of the latest American Styles, in Soft and Stiff Hats received to-day.

S. REID

122 GOVERNMENT STREET.

SILVERWARE OF THE HIGHEST GRADE.

THE QUESTION 'WILL IT WEAR'? NEED NEVER BE ASKED IF YOUR GOODS BEAR THE TRADE MARK

1847 ROGERS BROS.

AS THIS IN ITSELF GUARANTEES THE QUALITY.

BE SURE THE PREFIX 1847. IS STAMPED ON EVERY ARTICLE.

THESE GOODS HAVE STOOD THE TEST FOR NEARLY HALF A CENTURY.

SOLD BY FIRST CLASS DEALERS.

HUMPHREYS'

Dr. Humphreys' system differs from all other schools and kinds of medicines, being

ONE SPECIFIC FOR ONE DISEASE.

Dr. Humphreys' Manual (mailed free) tells about all the Specifics and Diseases they cure.

We can dwell upon but one or two at a time—they are all good.

RHEUMATISM

Is caused by Uric Acid in the blood. The acute attack is precipitated by Cold, Dampness, Rich Foods, or Liquors.

Dr. Humphreys' Specific No. 25 acts directly on the kidneys, opening the clogged ducts; the pent up secretions pass off, the blood is cleansed, and the cure is made quickly and permanently.

From the first "twinge" to the worst case of gout No. 25 cures.

"77" for COLDS.

If you will use care in dress, avoid unnecessary exposure, and carry and take "77" on the slightest suspicion of a Cold, you will keep well.

"77" cures Colds, Grippe, Influenza, Catarrh, Pains and Soreness in the Head and Chest, Cough, Sore Throat, General Prostration, and Fever, preventing pneumonia.

"77" will "break up" a Cold that "hangs on."

FEVERS—Congestions, Inflammations, and all pains are cured by Specific No. 1.

DYSPEPSIA—Indigestion, Weak Stomach, and all forms of biliousness are cured by Dr. Humphreys' Specific No. 10.

SKIN DISEASES—Eczema, Erysipelas, Hives, Salt Rheum, all yield quickly to Specific No. 14.

Small bottles of pleasant pellets—fits your vest pocket; sold by druggists, or sent on receipt of price, 25c., or five for $1.00. Humphreys' Medicine Co., 111 and 113 William St., New York. no16

AUCTION SALES.

W. T. HARDAKER, AUCTIONEER.

AUCTION

I am instructed to sell under Chattel Mortgage and Landlord's warrant,

Household Furniture, Piano, Etc.,

At Salerooms, Douglas street, on MONDAY, NOV. 18, AT 2 O'CLOCK.

Further particulars later.

no14 W. T. HARDAKER, Auctioneer.

BAILIFFS!

MORTGAGES.
BILLS OF SALE.
DISTRESS FOR RENT.

We are experienced in taking and holding possession under the above, always having reliable men at a moment's notice. We had several years' experience under the County Courts in England by special authority.

Cuthbert & Co'y

LEADING AUCTIONEERS.

Sales conducted in any part of the Province. For convenience of those who cannot wait for an auction

We Buy Furnished Residences

For cash. All business strictly confidential.

HERBERT CUTHBERT & CO.

WE HAVE SEVERAL DESIRABLE PROPERTIES FOR SALE

By private treaty, under mortgage, in many cases at half value. HOUSES, FARMS, LOTS. Two lots over the Bay are exceptionally cheap, as they are amongst the best building sites in the city. MONEY TO LOAN on real estate at lowest rates of interest. Furnished residences sold on commission or bought for spot cash at a moment's notice.

Confidential business of any kind.

HERBERT CUTHBERT & CO., Leading Auctioneers.

oc26

PLINY E. DAVIS & CO.

Auctioneers and Commission Merchants,

OFFICE AND SALESROOMS, - - - 37 AND 39 YATES ST.

Liberal advances made on consignments. Stocks of merchandise and furniture of dwellings bought for spot cash.

JOSHUA DAVIES

AUCTIONEER,

(ESTABLISHED 1863.)

Room 7, Board of Trade Building

SALESROOM NEXT DOOR.

HERBERT E. A. ROBERTSON,

Barrister, Solicitor, Notary Public, Etc.

41 Langley Street, VICTORIA, B.C. no12-1m

JOS. SEARS,

House and Sign Painter.

PAPER-HANGING, DECORATING, GLASSING, ETC. } CORNER OF BLANCHARD AND JOHNSON STREETS.

se22-1m

A GIVE AWAY

We had intended giving prizes in gold coin, open only to those who purchased goods at our store between now and December 31st, but we have, however, been so well patronized by the general public—and our new Men's Furnishing and Shirt Making venture as well as our low prices in Tailoring have been so well received—that we feel we can afford to be generous, so we make the following offer:

Everyone of either sex above the age of 16 will, within a few days, be supplied at our store with tickets on which they may register the length of time they think it will take a candle, which will be on exhibition at our store, to burn itself out. Candle to be lighted on January 2nd, 1896, and the one guessing nearest the time to receive, regardless of whether they purchase a cent's worth of goods or not,

$20.00 IN GOLD COIN.

REMEMBER—We don't ask you to buy before we allow you to guess. All you are required to do is to call in and register your guess, and if you are nearest to the length of time the candle burns, you will get your money. Is it worth guessing for?

GEO. R. JACKSON,

57 GOVERNMENT STREET.

WEILER BROS.,

51 TO 55 FORT STREET,

Respectfully draw the attention of their numerous patrons to the fact that their stock of General House Furnishings, Carpets, etc., is always replete with the latest styles . . . .

New-comers will do well to look over their extensive premises and view their great stock of FURNITURE, CARPETS, CROCKERY, GLASSWARE, Etc., before deciding hastily upon what appears to be cheap . . . . . .

LOST OR FOUND.

FOUND—At Beacon Hill, a part of a theodolite or sextant. Owner can have same by applying at this office and paying for this notice. no15-2t

FOUND—On corner of Douglas and View streets, a ship's pennant. Owner can have same by applying at Colonist office and paying for this notice. no15

THE NEW MAP

OF BRITISH COLUMBIA, mounted and varnished, will be delivered in Victoria, or sent C.O.D. by express to any point in the Province, ...

FOR $2.50.

The Map has just been issued by the Provincial Government, and should be in the possession of every business man. Address

THE COLONIST, VICTORIA, B.C.

WALTHAM WATCHES, $7.00

In solid silver cases, guaranteed for 5 years.

S. A. STODDART,

The New Watchmaker and Jeweller

68½ YATES STREET,

Cleans Watches thoroughly for 75c.
New Main Spring, 75c.
Balance and Pallet Staffs, $1.25.
And guarantees all work for 12 months.
Practical experience of over 25 years. ap4

A Handsome Pair

of Cloisanne Vases are for sale at Challoner & Mitchell's at a sacrifice price. They are of large size and beautiful pattern, and would prove a most attractive ornament in a drawing-room. See them.

WOOD-CORD-WOOD

The Saanich Wood Yard Office.

No. 1 Cordwood $3
Cut, split and put in shed $4
Bark per cord $4

JOHNS BROS., 259 Douglas St.

oc27-1mo Telephone 433.

REAL ESTATE SALE.

Part (25x75 feet), of Lot No. 406, Victoria, B. C., with a three-storey and Basement Brick Building Thereon.

Under and by virtue of the power of sale contained in a certain indenture of mortgage registered in the Land Registry Office, Victoria, B.C., in Charge Book vol. 10, folio 185, No. 11530B, tenders will be received by the undersigned for the purchase of the above described property until 12 o'clock noon, on the 30th day of November, 1895.

The title can be examined and any information in connection therewith gained at the office of the undersigned.

If the mortgage be not paid off before the said 30th day of November, 1895, the highest tender above principal and interest due, and other lawful charges, will be accepted.

J. ST. CLAIR BLACKETT,
74 Yates Street,
Agent for the Mortgagee.

Victoria, B.C., 12th November, 1895. no12-17t

MONEY TO LOAN for private clients on Victoria real estate in sums to suit borrowers, from $100 up to $10,000, at current rates of interest. A. W. More & Co., mortgage brokers, 70 Douglas street.

PRICES LOWER THAN EVER.

The extraordinary low prices of our goods, BOUGHT FOR CASH, demonstrates the fact that there is money in it for the purchaser.

WINTER SUITS, OVERCOATS, MACINTOSHES, HATS (Christy's and Stetson's). For Men and Boys.

WOOL UNDERWEAR, HOSIERY, NECKWEAR, SHIRTS, Etc., Etc.

In great variety and in the newest styles at

W. & J. WILSON'S

OPPOSITE POST OFFICE GOVERNMENT STREET.

AUCTION SALES.

Nov. 18—Furniture, etc. W. T. Hardaker.
Nov. 22—Furniture. H. Cuthbert & Co.

THE CITY.

LATE last night the police arrested in an old shack on the Indian reserve a gang of six toughs from the American side of the line.

MR. J. C. Voss, proprietor of the Queen's hotel, and not Mr. A. C. Wallis, supplied the banquet provided by the Sir Knights of Pythias on Thursday evening in honor of the visit of Grand Chancellor Ackerman.

THE case of James Dolphing, held for housebreaking, comes on for hearing in the city police court this morning. Birdell, arrested for having stolen property in his possession, secured his discharge yesterday on the insufficiency of evidence available.

REV. J. P. HICKS, pastor of the Victoria West Methodist church, and Rev. S. Wilkinson of Nanaimo, formerly of the James Bay church, exchange pulpits to-morrow, when Rev. Mr. Wilkinson will preach the annual missionary sermons in the pretty little church at Victoria West.

THE agricultural possibilities of the Bella Coola valley are well illustrated by a collection of vegetables now on exhibition in the window of D. H. Ross & Co.'s Government street store. The vegetables are from the New Norway settlement, and were brought to the Capital by Mr. P. J. Leech, C.E.

THE fact that Christmas is coming—and is in fact little more than a month away—is pleasantly emphasized by the appearance of the holiday number of the Ladies' Pictorial, more handsomely illustrated and more readable than ever. It has just been placed on sale by T. N Hibben & Co.

JOSEPH PYATT, a young man well known about town, is under arrest at city police headquarters with a charge of theft recorded against him that is set for investigation in the police court on Monday. Pyatt has a chum who mourns the loss from his room of about $65, and it is in connection with this loss that Detective Perdue and Officer Palmer arrested Pyatt on suspicion.

THE funeral of the late Fred Mallandaine, which takes place this afternoon from the family residence on Simcoe street and from St. James church, will be attended by the members of the J.B.A.A. in a body, they being requested to meet at the club house at 1:45. Full military honors will also be accorded the deceased, he having been a prominent and popular member of No. 2 company of the Garrison Artillery.

AN excellent entertainment was provided at the benefit concert and dance tendered Mrs. A. Blake, who was recently bereft of her husband and left with six little ones in destitute circumstances. The attendance in A.O.U.W. hall last evening was large and the programme which was presented under the management of Mrs. Lang was greatly appreciated. It was varied and always "catchy" and never once failed to please.

FIRST mate Christianson, of the bark Weitzeman, was arrested late on Thursday night by provincial constable Wallis on a charge of assaulting the second mate. The vessel was lying at Esquimalt ready to sail early in the morning, so that to avoid delay Mr. E. Baynes Reed, stipendiary magistrate, consented to try the case at 10 o'clock at night. The defendant was found guilty and fined $10 and costs. The vessel sailed early yesterday morning for San Jose.

CONSIDERABLE interest is being taken in the Lewis Cleopatra production which will be seen at the Victoria theatre on Wednesday and Thursday, November 20 and 21, and at the Thursday matinee. The barefoot ballet has made quite a sensation—so novel is this divertisement danced by six barefooted girls. The music and the chorus is of a semitic nature; the costumes are voluptuous and orientally rich. The piece is not only sumptuously staged; it is produced with a nice knowledge of the needs and resources of the stage. The entrances are happy, grouping effective, stage management good and lime lights, as parti-colored as Joseph's coat, shed their blue and purple effulgence on the scene. Chorus, ballet and Cleopatra's barge, the famous storm scene and a host of beautiful women are some of the features of the production.

THE autumn civil service examination was concluded yesterday at 2 p.m.; Dr. Campbell, who presided during the week, says that the papers were very fair and tested the knowledge of the candidates much better than did those of last year. He holds that the civil service board at Ottawa should advertise more fully in this province, which is so far away from the Capital, particulars regarding the examination, so that intending candidates would not, as is often the case, be debarred from writing by handing their applications to the local examiner instead of sending them to Ottawa, and other such mistakes. From the excellent arrangement of the papers this year, and general common sense which they indicate, he is convinced that the new secretary will give a good account of himself in future, and render great satisfaction both to the presiding examiners and candidates.

THE Victoria Dramatic Club, whose success in "Hazel Kirke" was notable and well remembered, will to-night make their second appearance at A.O.U.W. hall, this time in the charming Southern drama "Lynwood," the cast for which is as follows:

Victor Blanchard, of 10th Kentucky Federals.....Will M. Chapman
Dudley Middleton, Colonel of Confederates.....Frank LeRoy
Col. Edwin Carlyle, of Kentucky Independents.....Ed. Blum
Judge Carlyle, a Southern gentleman.....Thos. Gold
E. E. E. E. C. Carter, an English journalist.....Jas. Penketh
Joe, a faithful slave.....C. R. Carter
Pat O'Flaherty, a Union sentry....Geo. Watson
Capt. Renston, of the Kentucky Independents.....S. H. Jackson
Gay Carlyle, cousin to Lucile.....Miss Dollie Draut
Kate Wimarth, a French creole.....Mrs. Newman
Lucile Carlyle, Judge Carlyle's daughter.....Mrs. W. Chapman

PERSONAL.

Several Indiana friends who have been staying with Mr. and Mrs. Siddall have returned home highly delighted with Victoria.

W. A. Ward was a passenger inwards by the Charmer last night.

Superintendent F. S. Hussey has returned from the Mainland where he has been for the past week or more during the progress of the assizes.

Rev. P. H. McEwen is again in town, having returned from the Terminal City yesterday evening.

W. F. Bullen has got back from Vancouver.

H. Carmichael, provincial analyst, returned from the Mainland yesterday evening, as did also J. M. Palmer, provincial inspector of fruit pests, and Miss Palmer.

Dr. Langis, of Vancouver, is spending today in the Capital.

Captain Rudlin, who has been confined to his house for several days, is, his many friends will be glad to know, recovering and expects to resume command of the Charmer in a few days.

THE required permission for opening the Kaslo & Slocan railway for passenger and freight traffic was given yesterday by the government and Mr. D. J. Munn, president of the road, telegraphed the news to Kaslo.

AN "experience" concert will be held at the Centennial Methodist church on Tuesday evening, and two prizes have been offered for the best account of how the ladies of the church have employed their talents in raising funds for the church during the past month.

THE strange spectacle might have been witnessed on Belleville street yesterday of the members of the James Bay athletic association crossing on stilts to and from their clubhouse. In no other way could they safely pass, so huge was the overflow of the corporation "improvement" on the crossing.

GREAT preparations have been made for this evening's concerts at Temperance hall and in the Y.M.C.A. rooms. The former is in charge of the Good Templars of Victoria West, the latter is under the personal management and direction of Mr. Clement Rowlands, who promises a specially meritorious programme.

MR. Fred Holland, sergeant-major in the Garrison Artillery, took to himself a bride on Thursday evening in the person of Miss Lena Primrose, a Scotch lassie who for some time past has been visiting with relations in the neighborhood of Victoria. The ceremony was performed at St. John's church by the rector, Rev. Percival Jenns, Major F. B. Gregory supporting the groom and Miss Coker acting as bridesmaid.

THE Sir William Wallace society met as usual last night in their hall, Broad street. Piper Robertson played a fine pipe selection at the commencement of the evening's entertainment, after which Chief Russell called upon Messrs. Paterson and Brownlee for songs and the society's Chaplain, Rev. Dr. Campbell addressed the meeting on "The Canadian Constitution and Responsible Government." There was a large gathering of ladies and gentlemen and a good time was spent. Next Friday evening Mr. Albert Pineo, B.A., will lecture on "Hugh Miller, the Scotch Geologist." The secretary last evening announced that Mr. Rowlands was preparing a good programme for the concert to be held on the 29th.

THE public school board held a special session at the Central school yesterday to investigate charges of excessive punishment preferred by Solomon N. Phillips against Mrs. Taylor, of the Spring Ridge teaching staff, and by W. J. Merrifield against Mr. Nicholson, one of the teachers at the Boys' Central. After hearing all the evidence obtainable bearing upon the complaints and the explanations of the two teachers, the board decided that "the teachers did not exceed their authority nor administer punishment that was excessive under the circumstances"; the trustees, at the same time, thought it well to adopt a formal rider that "the teachers be requested to in future exercise the utmost discretion in the administering of corporal punishment." In the course of yesterday's debate both Trustee Marchant and Trustee Mrs. Grant placed themselves on record as opposed to corporal punishment in the schools.

improper and deficient care of the scalp will cause grayness of the hair and baldness. Escape both by the use of that reliable specific, Hall's Hair Renewer.

Wedding and birthday presents can be seen in unlimited variety at Weiler Bros. x

"LYNWOOD" at A. O. U. W. hall, Saturday. x

The largest stock of Boys' and Mens' Reefers in the city—Gilmore & McCandless. x

ONE BOTTLE CURES.

DEAR SIRS,—This winter I was troubled with a severe cold, I tried several remedies but without avail, On the advice of a friend I bought a bottle of Hagyard's Pectoral Balsam, which completely cured me.
ROY B. STAPLES,
Holland, Man

Atwood's Cough Cure for sale by all druggists. x

Merchants who wish special ruling, etc., on their blank books, should inspect the line of samples of home industry at The Colonist Bindery.

Cocoa mats in all sizes, wire mats, rubber mats, at Weiler Bros. Prepare for dirty weather. x

A SURPRISE—The Surprise Cash Grocery. Prices will surprise you; "cash is king." Corner Yates and Blanchard streets. J. M. Hughes. x

Arrived new wall papers, Mellor's. *

The U. S. Gov't Reports
show Royal Baking Powder
superior to all others.

MACKINTOSHES, $5.00, $7.75, $10.00.
RIGBY WATERPROOFS, $12, $14, $15.
SEE OUR UMBRELLAS, 75c., $1.00, $1.25

B. WILLIAMS & CO.,
Clothiers and Hatters, 97 Johnson Street, Victoria.

PREVOST'S PUNISHMENT.

Four Years in the Provincial Penitentiary the Sentence of the Ex-Registrar.

He Pleads Guilty to all Three Counts in the Indictment Against Him.

In the court room in which he had so often sat as registrar, James Charles Prevost yesterday stood in the dock as a prisoner and pleaded guilty to the three charges against him of stealing while in the employ of Her Majesty certain moneys belonging to Her Majesty, namely, $3,154 49 on December 22, 1893; $1,565 in October, 1893; and $827 in January, 1895.

Hon. Mr. Richards, for the Crown, handed in the indictments, and they were read, Prevost in each case pleading "guilty."

Mr. Charles Wilson, Q.C., for the prisoner, spoke very feelingly though briefly, asking the Court to deal leniently. While knowing that the Court, in spite of any personal feelings, had a painful duty to discharge, he would ask that before passing sentence His Lordship would consider the circumstances. He could say that his client did not raise the plea of guilty from any idea that it would bring him a lighter sentence; nor it was it done from any result of a conference between counsel for the defence and the prosecution. It was because of penitence and regret. The law was not formed to inflict punishment in a vengeful spirit but as a deciterrent, and this age lived under the prinples of Him who had said to a greater sinner, 'Go and sin no more!' He asked that while passing such a sentence as would punish, that the training, the mode of life, the age of the man and his penitence should receive some consideration, and he would entreat the Court to restore him in as short a time as possible to his wife and children.

Mr. Justice Crease in passing sentence said that he had a few words to speak to the prisoner, which he hoped would convey their intended impression to his mind and to that of every one else present, that he was doing it as the solemn duty of a judge. The three indictments set forth that as a public servant the prisoner had committed a grave offence. He had been thoroughly trusted by his superiors and by those about him in the Supreme court of which he had been the registrar, and he had betrayed that trust by purloining large sums of money intrusted to his care. The discovery had been a painful one, that a man of such capabilities and qualities should have done this thing. It was inexpressibly sad to the court to have to pronounce sentence, but duty was paramount. In considering the sentence about to be pronounced the allowance had been made for every favorable circumstance. The sentence of the court was:

On the charge of stealing $3,154.49, two years in the penitentiary; on the charge of stealing $1,568 08, one year and six months, to follow the first sentence; and on the charge of stealing $825, six months, to be entered upon at the expiration of the second term.

SHIPS AND SHIPPING.

Business of October Reviewed—The Mishap to the "Progressist"—Wharf Gossip.

Messrs. R. P. Rithet & Co., Ltd., in their review of trade and shipping for October says: "In the early part of the month freights stiffened considerably and the rate for approved grain vessels reached 30s. to Cork for orders. Later on, however, arrivals of part of the overdue fleet, and also of vessels under engagement, checked spot business. This naturally caused some decline in the freights, still the market remains fairly steady at near the figure quoted. As usual at this period of the year the list of lumber charters is moderate, and export business continues dull, without apparently much immediate prospect of improvement. The last sealing schooner having returned to port we add this month our customary supplement giving particulars of the Canadian catch. It will be observed that the total shows a serious falling off from last year. This will no doubt have due effect on the forthcoming sales in London."

MARINE NOTES.

Just one week ago yesterday the C.P.R. steamship Empress of China, sailed from Yokohama and with her customary good passage will arrive here on Tuesday morning. Her cargo is a very large one comprising 1,900,000 pounds of overland freight, besides 270 tons of silk for New York, and 270 tons of general merchandise for this city. She brings 30 saloon passengers and 225 Chinese.

Local pilots who were looking for the collier Progressist this week have been disappointed. The vessel left San Francisco on Saturday last, north bound, and was obliged to put back through stress of weather, with some of her forward parts caved in. She returned to port on the 12th inst., and will, it is understood, be obliged to make considerable repairs before going north again.

Tug Lorne with the coal laden bark Oriental in tow for San Francisco, put back to the Royal Roads for shelter on Thursday night. She had started down the Straits with her tow, but found the gale too strong, and was obliged to wait until yesterday. Upon her return from the Cape the tug will go up to Vancouver for the coal bulk Robert Kerr.

The steamship Danube commenced discharging her big salmon cargo at the outer wharf yesterday. She will land the Lowe Inlet, Alert Bay and Cunningham cannery consignments, but the balance of the cargo, which is for transhipment to England, she will take up to the Fraser river.

After a delay of several days in the Royal Roads, occasioned by three of her crew deserting, the bark Weitzemann, lumber laden for Santa Rosalie, proceeded on her voyage yesterday morning. She was given a tow down the Straits by the tug Constance.

The agents of the Canadian-Australian line have had to refuse freight offering for shipment on the steamship Warrimoo during the last few days, owing to there being a full cargo listed ahead. The steamer will sail either this evening or to-morrow.

There was not a dollar of insurance on the steamer Cariboo & Fly when she met her fate on the Skeena river a fortnight or so ago.

The little American steamer Roche Harbor arrived in from the island of that name last evening with a big shipment of lime for Honolulu.

The steamer Barbara Boscowitz sails for the North this evening with numerous passengers and heavy freight consignment.

ENTERED.

Str. Charmer.....from Vancouver.
" City of Kingston... " Port Townsend.
" Rosalie..... " " "
" Sehome..... " " "
" Danube..... " Port Simpson.
" Yosemite..... " N. Westminster.
" Evangel..... " Port Angeles.

CLEARED.

Str. Charmer.....for Vancouver.
" City of Kingston... " Port Townsend.
" Rosalie..... " " "
" Sehome..... " " "
" Yosemite..... " N. Westminster.
" Evangel..... " Port Angeles.
" Barbara Boscowitz.. " Vancouver.

Catarrh in the Head

Is a dangerous disease because it is liable to result in loss of hearing or smell, or develop into consumption. Read the following:

"My wife has been a sufferer from catarrh for the past four years and the disease had gone so far that her eyesight was affected so that for nearly a year she was unable to read for more than five minutes at a time. She suffered severe pains in the head and at times was almost distracted. About Christmas, she commenced taking Hood's Sarsaparilla, and since that time has steadily improved. She has taken six bottles of Hood's Sarsaparilla and is on the road to a complete cure. I cannot speak too highly of Hood's Sarsaparilla, and I cheerfully recommend it." W. H. FURSIER, Newmarket, Ontario.

Hood's Sarsaparilla
Is the Only
True Blood Purifier

Prominently in the public eye today.

Hood's Pills cure habitual constipation. Price 25c. per box.

Is it True

That you are paying fifty cents a pound for Tea which you do not think very good? If so, try a pound of our "Queen" Blend at forty cents, which will please the palate and the purse at the same time.

Victoria Tea House,
79 Government St.
Opposite Post Office.

SAUSAGE...
Try our superior Pork Sausage, Pork Pies, Sausage Rolls, Potted Head and Pressed Meats—all our own make. Pickled and Fresh Pork, Hams, Bacon and Lard.
BEATY & CO. 45 Government Street, Next to C. E. Redfern's. oc25-1m

NOBBY
Piano Stools

We beg to advise our numerous customers who have been waiting for our Nobby Piano Stools to arrive, that we have this morning received a shipment, which for elegance, style and cheapness, cannot be equalled.

A new shipment of the famous Heintzman Pianos also just arrived, in latest styles.

M. W. WAITT & CO.
64 GOVERNMENT STREET.

THE
COLFING JERSEYS

SO LONG EXPECTED,
ARRIVED TO-DAY
(NOVEMBER 13)

J. Hutcheson & Co.
THE WESTSIDE.

SHAKE! SURE YOU DID?

Didn't need anyone to shake you, either, this morning, did you? The cold wind did that to perfection. Don't try to

KEEP WARM

with the idea that there will be many warm days yet this Fall. There may be some days that the sun shines bright; but don't deceive yourself. You'll need a good warm

MACINTOSH

to wear mornings and evenings. A coat that not only keeps out the cold and wet, but one that will wear well. We have it. It's a line at $10, in Blue, Grey and Brown, Melton and Tweeds, extra long capes, seams sewn, all sizes. Call and see them.

CAMERON, 55 JOHNSON STREET.

MUMM'S

ANOTHER SHIPMENT OF THE CELEBRATED
G. H. Mumm's
Extra Dry Champagne
JUST ARRIVED.
PITHER & LEISER,
VICTORIA, B. C.

CLARKE AND PEARSON

17 YATES STREET, VICTORIA, B.C.
—MANUFACTURERS OF—
The Wonderful Air-Tight Heaters
SOLE AGENTS FOR McCLARY'S FAMOUS STOVES.
Call and inspect our display of Steel Plate Ranges and Stoves. Unsurpassed, if equalled, in the Province.

ANOTHER LOT
OF THOSE
LADIES' 25c. STOCKINGS
—AT—
THE WHITE HOUSE.

HOARY HEADED MONSTERS.

Wealthy San Franciscans Arrested for Most Horrible Crimes—Accused Identified by Eight Victims.

SAN FRANCISCO, Nov. 15.—Captain Peter Lane, capitalist; Leon R. Meyer, capitalist, and Phillip Ratz, were arraigned before Police Judge Campbell to-day to answer for a series of crimes that surpass anything in the annals of the local courts. Lane is nearly 80 years old, almost blind, and very infirm. Meyer is 51 years old, and apparently possessed of all his faculties. Already the police have taken in charge eight little girls, ranging in age from 8 to 13 years, and they state that 22 more girls of the same age will be called to testify against the men. The venerable trio made their headquarters at the house of Captain Lane, who is said to be worth $200,000. To that house girls ranging from 8 to 13 years were brought by an older girl, who received 25 cents for each. The surgeon of the receiving hospital said there was no doubt the children had been outraged. Judge Campbell held the men in $6,000 bail each, and they will be examined Friday. The society for the prevention of cruelty to children has been investigating the case and claims to have evidence that will convict the men of the crimes charged against them.

Carpets cleaned and colors restored equal to new by T. Roberts & Co., Quadra and Pembroke street. x

A SENSATION IN COURT.

The Owner of the "Shelby" Imprisoned for Sending Money to the Chief Justice.

Judgment Condemning the Schooner—Question of Fine or Forfeiture to Be Argued.

There was a sensation in the Admiralty court yesterday morning, when the Chief Justice previous to giving judgment in the case of the crown against the schooner Shelby, sentenced Louis Wille, the owner of the vessel in question, to one week's imprisonment for sending him an anonymous letter containing $25.

When His Lordship ascended the bench he immediately asked Mr. Helmcken, counsel for the Shelby, if Mr. Wille the owner of the schooner, was present. Mr. Helmcken replied yes, and Mr. Wille was thereupon called to the witness box.

His Lordship showing him a piece of paper asked him if it was in his writing.

Mr. Wille replied, "Yes."

His Lordship—"Then you are responsible for the contents of this letter and for sending it to me. Do you acknowledge that"?

Mr. Wille—"Yes sir".

His Lordship—"The reason for my calling for Mr. Wille is the receipt by myself of a letter which Mr. Wille acknowledges to be in his handwriting, and which is addressed to me. It reads:

"*To Your Lordship, Chief Justice Davie:*

"Kindly accept this small donation for kind services re schooner Shelby.

"YOUR SERVANT."

[Enclosed in the letter were $25 in bank bills.]

"Now," continued His Lordship, "what have you to say for having sent that letter and its contents to me?

Mr. Wille (after a pause)—"My foolishness."

His Lordship—"Your foolishness! Well, I am inclined to think it is. I do not think it was anything else but ignorance that led you to suppose that justice was to be purchased in this court or in this country by money. By sending an offer of that kind, a bribe, to a judge, you have laid yourself open to a very heavy punishment indeed, and to prosecution upon a very serious charge. I do not know whether government or the Attorney General's department will prosecute you for it. Possibly in view of the course I am about to adopt they will not do so. It is my duty to mark my sense of the wrong of which you have been guilty, and I therefore sentence you to one week's imprisonment in the common jail and to pay a fine of $25. Mr. Registrar (handing the registrar Mr. Wille's letter and contents) you will appropriate this $25 in payment of the fine, and you Mr. Wille will go to jail for a week."

Mr. Helmcken—"I may say Your Lordship that under the circumstances so far as I am concerned I don't wish to have any further connection with the case."

His Lordship—"I know it is a very painful thing for you Mr. Helmcken. My judgment was prepared before receipt of the letter.

The Sheriff, who was present, immediately took Mr. Wille into custody and he will spend the week in jail.

The Chief Justice then proceeded to deliver the judgment in the Shelby case as follows:

"The British vessel Shelby, Christian Claussen master, was seized by an officer of the U.S. Corwin on the 11th of May, 1895, in latitude 52 degrees 52 minutes 10 seconds north and longitude 134 degrees 10 minutes 58 seconds west, being a point within the prohibited waters of the Pacific ocean as defined in the Behring Sea award act, 1894, for an alleged contravention of the act, such contravention being the employment of the vessel in pursuing seals within the prescribed waters during the period prohibited by law.

"By force of the scheduled provisions of the Behring Sea award act, 1894, which under section 1 are to have the same effect as if enacted by the act, the pursuit of seals within the aforesaid limit is prohibited, and by section 2 of section 1, if there is any contravention of the act, any person committing, procuring, aiding or abetting such contravention is guilty of a misdemeanor, and the ship employed in such contravention and her equipment, and everything on board thereof, are liable to forfeiture to Her Majesty, provided that the court, without prejudice to any other power, may release the ship, equipment or thing on payment of a fine not exceeding £500.

"At the time of her seizure the Shelby was fully manned and equipped for killing, capturing and pursuing seals, and had on board implements and sealskins.

"By section 1, sub-section 6, of Seal Fishery (North America) act, 1893, which act was in force at the time of the seizure, if, during prohibited times and in prohibited waters, a British ship is found having on board thereof fishing and shooting implements or sealskins, it shall lie on the owner or master of such vessel to prove that the ship was not used or employed in contravention of the act. The acts of 1893 and 1894 being in pari materia are to be read as one act: McWilliam v. Adams, 1 Macq., H. L. Cas., 120.

"The Shelby, therefore, having been found within prohibited waters with seals and implements for taking them on board is to be deemed to have been employed in contravention of the act unless the contrary be shown.

"Has it then been shown that the ship was not used or employed in contravention of the act? The most important witness to prove this, if such were the case, would clearly have been Captain Claussen, the master, but he was not called, nor has the failure to call him been satisfactorily accounted for. The only reason offered for his absence is that he was away on a fishing expedition. His evidence might have been taken de bene esse, but no effort to procure his evidence seems to have been made. The mate, August Reppon, was called as a witness, and stated that the Shelby stopped sealing on the 30th of April, when the ship's log shows the vessel to have been in latitude 58 degrees 30 minutes north and longitude 139 degrees 30 minutes west, and that she then set sail for Victoria. On the 11th of May, after 10 or 11 days' sailing, she was found by the Corwin in latitude 52 degrees 52 minutes and 10 seconds north, and longitude 134 degrees 10 minutes and 58 seconds west, a distance approximately of four hundred miles from the point of starting, or less than an average of forty miles a day. The proper course for the ship to have steered for Victoria was E.S.E. magnetic, but it appears that frequently when the course of the wind as indicated by the log would have permitted that course to be made good the vessel was not headed in that direction. For instance, on the 2nd of May she was headed on a southerly course; on May 3 on a south by west course, and on the 5th of May on an east by north course, whereas the wind on each of these days was favorable to an east-southeast course. Captain Moggridge states, from an examination of the log, that the schooner ought to have made a considerably greater distance on her course during these days, and in view of the fact, as stated in evidence, that the Shelby had a favorable current of nearly a knot an hour, it is clear that she ought to have made a much greater distance. The Corwin, in coming from the south to the point where she picked up the Shelby, experienced strong head winds, which were favorable winds for the Shelby, and the prevailing winds at that time of the year, as shown by the Coast Pilot, are westerly, also favorable to the E.S.E. course to be made by the Shelby.

"The Corwin seized the Shelby for contravention of the act, placed a crew on board her and ordered her to Sitka, a distance of 260 miles, which she reached under sail in a little over two days. At Sitka the Shelby was ordered to Victoria, a distance of about 800 miles, as shown by the chart, which place she made, likewise under sail, in fourteen days.

"The mate, when asked to explain why he went out of his course, particularly on the 2nd, 3rd and 5th of May, ascribes the fact to defects in the compass, which he says varies three or four points, but this statement is shown by his own evidence to be an equivocation, and the variation to have had no effect whatever on the course actually made or intended to be made, for whilst it is true that the compass varies, and varies considerably, such variation is regular, known precisely, and duly allowed for. Having committed himself on his examination at the hearing to the variation of the compass reason, which he was compelled to admit on cross-examination was no reason at all, he was by permission of the court recalled a day or two after the evidence had closed, and he then ascribed the deviations from the course to the state of the wind.

"I find myself entirely unable to place any dependence on the evidence of the mate, Reppon, and this leaves the deviations from the regular course between the 1st to the 11th of May, and the fact that 400 miles only was made in ten days, altogether unaccounted for. It is true that Denny Florida, a hunter, August Schone, the cook, and Victor Emanuel Laerquest, one of the seamen, all testify, and I have no doubt with truth, that no seals were taken during these days, nor were the boats lowered, but it appears also that none were seen during these days. Their evidence leaves the question of deviations from the course untouched and, in the absence of evidence explaining it, the only reasonable conclusion is that the deviations were occasioned by the attempt to pursue seals. At all events it has not been proved to my satisfaction that the vessel was not employed in the pursuit of seals during these dates. In Reg. v. the Minnie, 4 Exch. 151, it was held by Crease, J., that the presence of the ship within prohibited waters required the clearest evidence of bona fides to exonerate the master of any intention to infringe the provisions of the act, and that as his explanation of the circumstances in that case was unsatisfactory the ship must be condemned. This ruling is, I think, in thorough accord with sub-sec 6 of sec. 1, and I am bound to follow it. It applies exactly to this case. Here the captain has offered no explanation at all, and the explanation of the circumstances, suspicious in themselves, given by the mate is unsatisfactory. The vessel, therefore, must be condemned.

"I am inclined to think that this is a case, as no actual taking of seals is shown, but negatived upon the evidence, where a fine might meet the justice of the case, instead of forfeiture. I have power, under sub-sec. 2 of section 1 of the act of 1894 to substitute a fine for forfeiture. I will hear counsel upon this point. The costs of suit must follow the condemnation."

"The Common People,"

As Abraham Lincoln called them, do not care to argue about their ailments. What they want is a medicine that will cure them. The simple, honest statement, "I know that Hood's Sarsaparilla cured me," is the best argument in favor of this medicine, and this is what many thousands voluntarily say.

Hood's Pills are the best after-dinner pills, assist digestion, cure headache. 25c.

Doctors recommend Norway Pine Syrup because it is the best cure for coughs and colds. Price 25c and 50c at druggists.

To Tinsmiths, Plumbers and Others.

LEWIS LEWIS, who desires to retire from business, offers en bloc, the entire stock of Stoves and Tinware at a reduction on invoiced prices, also the Tools and Machines necessary for carrying on the business of Tinsmith and Plumber. Lease of the premises, 44 Yates Street, where the business has been carried on for 10 years, may be had if desired.

oc20-1m

EDUCATIONAL.

VICTORIA COLLEGE,

BEACON HILL PARK,

(LATE CORRIG COLLEGE)

WINTER TERM BEGINS MONDAY, NOV. 11.

For Boarding or Day Prospectus apply

au4-d&w PRINCIPAL J. W. CHURCH, M.A

MATERNITY (late Samaritan) Home, has moved to larger premises, at 199 Johnson street. Applicants please apply at the Home, or to Mrs. Higgins, Cadboro Bay Road or to Mrs. Flumerfelt, Gorge Road.

Timely Warning.

The great success of the chocolate preparations of the house of **Walter Baker & Co.** (established in 1780) has led to the placing on the market many misleading and unscrupulous imitations of their name, labels, and wrappers. Walter Baker & Co. are the oldest and largest manufacturers of pure and high-grade Cocoas and Chocolates on this continent. No chemicals are used in their manufactures.

Consumers should ask for, and be sure that they get, the genuine Walter Baker & Co.'s goods.

WALTER BAKER & CO., Limited,
DORCHESTER, MASS.

Our new stock of goods is beginning to arrive for the coming Christmas Holidays, and we are making extensive alterations to provide for increase of trade. If you wish a large stock to select from, remember T. N. HIBBEN & CO.'S is the place to go.

GRATEFUL—COMFORTING.

EPPS'S COCOA

BREAKFAST—SUPPER.

"By a thorough knowledge of the natural laws which govern the operations of digestion and nutrition, and by a careful application of the fine properties of well-selected Cocoa, Mr. Epps has provided for our breakfast and supper a delicately flavored beverage which may save us many heavy doctors' bills. It is by the judicious use of such articles of diet that a constitution may be gradually built up until strong enough to resist every tendency to disease. Hundreds of subtle maladies are floating around us ready to attack wherever there is a weak point. We may escape many a fatal shaft by keeping ourselves well fortified with pure blood and a properly nourished frame."—Civil Service Gazette.

Made simply with boiling water or milk. Sold only in half-pound tins, by Grocers, labelled thus: JAMES EPPS & CO., Ltd., Homœopathic Chemists, London, England. ocld-w

MUNICIPAL ELECTIONS, 1896.

HOUSEHOLDERS' QUALIFICATIONS.

All persons wishing to qualify under the above qualifications, as voters for the ensuing municipal elections for the year 1896, in accordance with Clause E of Section 37 of the Municipal Amendment Act, 1894, can do so by calling at the Assessor's Office, City Hall, and making the necessary declaration on or before the 30th day of November, instant.

WM. W. NORTHCOTT,
Assessor.

City Hall, Victoria, B.C.,
November 1st, 1895. no1-1m

NOT RESPONSIBLE.

BARQUE SILVERHOW,
(From Liverpool.)
Capt. J. Dougall.

Neither the Captain nor the undersigned will be responsible for any debts contracted by the crew of the above vessel without their written order.

FINDLAY, DURHAM & BRODIE,
no14 Agents.

CONSIGNEES' NOTICE

BR. BQ. SILVERHOW,
(From Liverpool.)
Captain J. Dougall.

This vessel will discharge cargo at Outer Wharf.

Consignees are requested to present bills of lading at the office of the undersigned, pay freight and receive orders for their goods.

All goods remaining on the Wharf after 5 o'clock each day and while on the Wharf, will be at the risk of the Consignees thereof respectively, and may be stored at their expense.

FINDLAY, DURHAM & BRODIE,
no14 Agents

40-ACRE FARM FOR SALE

Situated half way between Chemainus and Maple Bay, and within 3 miles of Hall's Crossing, on the E. & N. Railway and ten miles from Duncan's. Five acres are under cultivation, and the balance has been slashed and burned, and with a slight expense can all be made ready for crop. The property is well situated, having a half mile frontage on the water. There is excellent water on the property for all purposes. There is a small house and barn on the land. For anyone requiring a small farm or a charming country seat, the above will be found well suited to their desire. The property, including various implements, will be sold for $2,000. Terms will be made to suit the purchaser.

For further particulars apply to "Rancher," care of The Colonist.

no22-tf

WEATHER STRIPS

FOR DOORS AND WINDOWS.

General Repairs.
Carpenter Work of all kinds.

J. P. BURGESS,

se12-m 10 Broughton Street.

HOME FOR LADIES during confinement, or any sickness of non-infectious nature. 5 Kane street, near Blanchard. The Nurses are thoroughly experienced, and the lady Principal holds numerous Diplomas and Testimonials, including a first-class certificate from Queen Charlotte Hospital, London, England. oc5-3m

HUGHITT & McINTYRE ESTATE.

Notice to Creditors and Others.

Notice is hereby given that the Trustees of the above Estate, acting under the trust deed of assignment, bearing date the 6th October, 1893, for the benefit of the creditors of Amos J. Hughitt, require all persons having claims or demands on the said Estate to forthwith send the amount and full particulars thereof to Matthew Trotter Johnson, Wharf street, Victoria, B.C.

And notice is also given that at the expiration of one month from this date the Trustees will proceed to distribute the proceeds of the said Estate, having regard to the claims of which the Trustees then have notice.

Dated 6th November, 1895.

THOMAS EARLE, } Trustees.
M. T. JOHNSTON, }
no7-1m

MORTGAGEES' SALE—Tenders will be received by the undersigned up to 12 o'clock noon, of the 15th day of November, 1895, for the purchase of Lot 16, Group 1, Kamloops Division of Yale District, containing 327 acres more or less, known as the George H. Rashdall Ranch with all improvements thereon. This property is beautifully situated on the west side of Okanagon Lake and is eminently adapted for fruit raising. Good fishing and shooting in the immediate vicinity. Terms half cash, balance on time to suit purchaser.

Victoria, B.C., 29th October, A. D. 1895.

DRAKE, JACKSON & HELMCKEN,
oc30- Solicitors for the Mortgagees.

NOTICE

Is hereby given that application will be made to the Parliament of Canada, at its next session, by the Supreme Court of the Independent Order of Foresters, for an Act to amend their Act of Incorporation, 52 Victoria, chapter 101, in the following particulars, viz:—

1. To increase the amount of maximum mortuary benefit from three thousand to five thousand dollars.

2. To enable them to invest in United States bonds, or in similar securities in Great Britain, or in any other country in which they may desire to carry on their business, such amount of their surplus as may be necessary to meet the requirements of such country with regard to the deposit of security by insurance companies doing business in such country; the total amount of such investments not, however, at any time to exceed one-fourth of their total available surplus or accumulated funds.

3. To strike out of section 8 of their said Act the provision exempting their policies from Government inspection.

4. So as further to provide as follows:—

(a) That a sworn statement shall be made annually to the Government of the assets and liabilities of the said Court and of their income and expenditure in respect of the mortuary benefit and of the sick and funeral benefit departments;

(b) That the Superintendent of Insurance may from time to time examine the books and vouchers so as to verify the said annual statement;

(c) That a deposit of $250,000 shall be maintained with the Government, with power to increase the amount as may be deemed necessary;

(d) That no member shall be liable for any assessments, dues or fines to the Order, or for any debt or liabilities of the Order, but all such payments shall be voluntary, but no member or his beneficiary shall be entitled to any pecuniary benefits of the Order during the time that he is in default of any such payment.

ORONHYATEKHA,
Supreme Chief Ranger.
JOHN A. McGILLIVRAY,
Supreme Secretary.

Toronto, 3rd October, 1895. no2 9s

1895, "B" No. 16.

In the Supreme Court of British Columbia

In the Matter of the "Quieting Titles Act," and of Town Lot number Nine Hundred and Thirty-Six (936), according to the official map of the City of Victoria.

Friday, the 1st day of November, A.D. 1895.

UPON hearing read the petition of Ralph Borthwick herein, dated the 27th day of April, 1895, and the documents set forth in the schedule thereto, the affidavit of the said petitioner in support of the said petition, the certificate of the Registrar General of Titles relating to the title of the above mentioned lot, dated the 29th day of April, 1895, and the certificate of counsel relating to the said title, dated the 27th day of April, 1895, and upon hearing Mr Duff, of counsel for the said petitioner, I do order that a declaration of the petitioner's title to the above-mentioned land do issue as prayed by the above-mentioned petition upon notice to adverse claimants to the said land of the application herein, and of this order being published in the British Columbia Gazette and in the Saturday issues of THE DAILY COLONIST for three months from the date of this order, provided that no adverse claim shall be filed within the said period with the Registrar of this Court.

GEO. A. WALKEM, J.

NOTICE.

Pursuant to the above order notice is hereby given that any person having, or pretending to have, any title to or interest in the above-mentioned lands or any part thereof, is required, before the issue of the above mentioned declaration, to file a statement of his claim with the Registrar of the Supreme Court of British Columbia pursuant to the above Act.

November 1st, 1895.

HUNTER & DUFF,
no2-3m-sa Solicitors for the Petitioner.

NOTICE—Estate of F. W. Robson—Final dividend in the above estate will be declared on the 21th day of November next, and will be payable immediately thereafter at the office of R. P. Rithet & Co. Ltd., Wharf street, Victoria, regard being had only to such creditors of the estate as shall then have sent in and proved their claim.

Dated the 23rd day of October, 1895.

DRAKE, JACKSON & HELMCKEN,
oc21-1m Solicitors for the Assignee.

NOTICE.

Notice is hereby given that I have this day taken possession of all the goods and chattels now in and upon the premises known as 133 Government street, Victoria, mentioned in a certain chattel mortgage made by Frederick Landsberg, in favor of Joseph Marymont, dated the 29th day of May, 1895.

H. SIDDALL,
Bailiff for the said Mortgagee.

Dated October 23, 1895. oc24

NOTICE.

Notice is hereby given that application will be made to the Legislative Assembly of the Province of British Columbia, at its next session, for an Act to incorporate a company with power to operate traction engines and cars upon the Cariboo Wagon Road and tributary roads in British Columbia.

W. H. ARMSTRONG,
oc18 Agent for Applicants

HANG WO HING KEE,

Importer and dealer in

Chinese and Japanese Fancy Goods.

New goods just arrived.

NO. 31 CORMORANT ST., VICTORIA, B.C. • P.O. BOX 832.
oc27-1mo

TENDERS.

TENDERS

Will be received by the undersigned up to the 30th day of November, 1895, for the purchase of all or any of the following described properties, viz:

Victoria City.

1. Lots 13 (thirteen), and fourteen (14), portions of subsection twenty-nine (29), of section eighteen (18), Victoria District, now Victoria City Map 71. These lots are situate at the corner of Dallas Road and Simcoe street.

2. Lots one (1), two (2), three (3), four (4), five (5), six (6), seven (7), eight (8), nine (9), ten (10), eleven (11), twelve (12), thirteen (13), fourteen (14), lying between Pandora Avenue and Alfred street, of sections twenty-nine (29), thirty (30), thirty-one (31), forty (40), forty-one (41), forty-two (42) and forty-three (43), Spring Ridge Map 182.

3. Section 32, Spring Ridge (less a strip 10 feet wide taken from the northerly and southerly sides for road purposes, lying between Pandora Avenue and Alfred street, together with the dwelling house and other buildings thereon.

4. Part (43 ft. x 135 ft.), of section 33, Spring Ridge (Pandora Avenue.)

5. Lot one hundred and seventy-six (176), Block one (1), together with the brick building thereon erected. These premises are situated and numbered thirty-nine (39), and forty-one (41), in Johnson street.

6. Lot three (3), fronting Foul Bay, part of section XIX, Victoria District.

7. Lot one hundred and twenty-seven, in Block "Q," of section thirty-one (31), Victoria West, together with the frame dwelling house erected thereon. This Lot fronts on Langford street.

8. A sum of nine hundred dollars ($900), carrying interest at eight per cent. per annum secured by mortgage of Lots one thousand eight hundred and ninety-seven (1,897), and one thousand eight hundred and ninety-eight (1,898), Kingston street, James Bay, subject to a prior mortgage to secure two thousand seven hundred and fifty dollars ($2,750), and interest at nine per cent. per annum.

Esquimalt District.

An undivided one-third interest in suburban Lot fifty-four (54), fronting on Constance Cove, Esquimalt.

Sooke District

Sections thirty (30), thirty-one (31), and forty-eight (48), containing three hundred and sixty-eight and seventy one-hundredths (368.70-100ths) acres more or less.

Rupert District.

Section fourteen (14), Township two (II), containing four hundred and eighty-three acres more or less.

Coast District.

Lot nine (9), Range two (2), containing one hundred and sixty-six acres more or less.

Alberni District.

1. Lot one hundred and forty (140), containing one hundred and forty-six acres more or less.

2. Lots four (4), five (5), six (6), seven (7), Block one (1), in townsite of Alberni, (Map 197), subdivisions of Lot one (1), Alberni District.

Queen Charlotte District.

The north west quarter (N.W. ¼), section twenty-four (24), and south west quarter (S.W. ¼), section twenty-five, Township nine (9), and north west quarter (N. W. ¼), section six (6), and south west quarter (S.W ¼), section seven (7), Township seven (7), containing altogether six hundred and forty acres (640 acres) more or less.

Clayoquot District.

Section forty-four (44), containing one hundred and seventy acres (170 acres) more or less.

Texada Island—New Westminster District.

An undivided one-seventh interest in the south west fractional quarter of section three (3), and the north west quarter of section five (5), containing three hundred and seven acres (307 acres) more or less.

Lasquiti Island—Nanaimo District.

An undivided one-fifth interest in sections thirteen (13), twenty (20), and thirty-five (35), and south west quarter (S. W. ¼), of section twenty-nine (29.)

Terms cash.

The highest or any tender not necessarily accepted.

For further particulars apply to

BODWELL & IRVING,
21 Bastion Street.
oc27 1mo Victoria, B.C.

TENDERS WANTED.

Under and by virtue of the powers of sale contained in certain Indentures of mortgage registered in the Land Registry Office at Victoria, B.C., as No. 11138B, in Charge Book vol. 10, fol. 94, and No. 11493B, in Charge Book vol. 10, fol. 179, tenders will be received by the undersigned up to noon of the 14th day of November, 1895, for the purchase of the houses and lots described therein.

The highest or any tender will not necessarily be accepted.

There is a well built two-storey frame dwelling, brick foundation, on one lot, and a frame cottage on the other.

For particulars and permits to view the premises apply to

DALBY & CLAXTON,
64 Yates Street, Victoria, B.C.,
oc31-td Agents for the Mortgagees.

NOTICES.

TABLE

Showing the Dates and Places of Courts of Assize, Nisi Prius, Oyer and Terminer, and General Gaol Delivery for the Year 1895.

FALL ASSIZES.

Vernon	Monday	14th October
Lytton	Friday	11th October
New Westminster	Wednesday	6th November
Vancouver	Monday	11th November
Victoria	Tuesday	19th November
Nanaimo	Tuesday	26th November

au23-d&w-td

PROVINCIAL SECRETARY'S OFFICE.

HIS HONOUR the Lieutenant-Governor has been pleased to make the following appointments:—

25th October, 1895.

BRIAN HALSEY TYRWHITT DRAKE, of the City of Victoria, Esquire, Barrister-at-Law, to be Registrar of the Supreme Court of British Columbia.

30th October, 1895.

WILLIAM J. FEKER, of Kyuquot, V.I., Esquire, to be a Justice of the Peace within and for the Comox Electoral District. no1-1w

NOTICE.

Mr. B. H. Tyrwhitt Drake, having been appointed Registrar of the Supreme Court, retired from our firm on 24th ultimo.

4th November.

DRAKE, JACKSON & HELMCKEN.
no5-1m

NOTICE.

Belleville St., between McClure St. and Birdcage Walk, is closed to Public Traffic.

E. A. WILMOT,
aug 3 City Engineer.

STEAMERS AND SHIPS

O. R. & N. STEAMSHIP LINE.

CHINA AND JAPAN.

SS. MOUNT LEBANON—Due at Victoria about December 5th, for HONOLULU.

SS. RHOSINA—(3,800 tons dead weight)—Due at Victoria December 23, for HONOLULU, via Portland.

Pugot Sound & Central America S.S. Co.

SS. TRANSIT—Tons, Capt. Berg, will leave Seattle on 10th November, for Central American ports.

For freight and particulars apply to
F. C. DAVIDGE & CO., Agents.

F. C. DAVIDGE & CO'Y,

COMMISSION MERCHANTS AND SHIPPING AGENTS,
—Importers of—
Japanese Rice, Silk and General Merchandise.
BOARD OF TRADE BUILDING, VICTORIA

FOR

Puget Sound Points.

CUT RATES!

$1.00 TO SEATTLE.
50c TO PORT TOWNSEND

ON THE FAST

STR. "SEHOME"

Leaving here daily, except Sunday, at 9 a.m.

E. E. BLACKWOOD, AGENT.

PACIFIC COAST S. S. CO.

DESPATCH A STEAMER EVERY FIVE days for San Francisco, carrying Her Majesty's mails, from Outer Wharf at 8 p.m.

Walla Walla - - Nov. 19

R. P. RITHET & CO.
mch26 Agents

C. P. Navigation Co., Limited.

TIME TABLE NO. 27

Takes effect June 21st, 1895.

Vancouver Route:

Victoria to Vancouver—Daily, except Monday, at 2 o'clock.

Vancouver to Victoria—Daily, except Monday, at 13.15 o'clock, or on arrival of C.P.R. No. 1 train.

New Westminster Route:

LEAVE VICTORIA for New Westminster, Ladner's Landing and Lulu Island—Sunday at 23 o'clock; Wednesdays and Fridays at 7 o'clock. Sunday's steamer to New Westminster connects with C. P. R. train No. 2 going east Monday.

For Plumper's Pass—Wednesdays and Fridays at 7 o'clock.

For Moresby and Pender Islands—Friday at o'clock.

LEAVE NEW WESTMINSTER for Victoria—Monday at 13.15 o'clock; Thursday and Saturday at 7 o'clock.

For Plumper Pass—Thursday and Saturday at 7 o'clock.

For Pender and Moresby Islands—Thursday at 7 o'clock.

Northern Route:

Steamships of this Co. will leave for Fort Simpson and intermediate ports, via Vancouver the 1st and 15th of each month at 8 o'clock When sufficient inducements offer, will extend trips to West Coast points, and Queen Charlotte Islands.

Barclay Sound Route:

Steamer Maude leaves Victoria for Alberni and Sound Ports the 10th, 20th and 30th of each month.

The Company reserves the right of changing this Time Table at any time without notification.

JOHN IRVING, Manager
G. A. CARLETON, General Agent.
Victoria, Jan. 1st, 1895.

Steamer

Mary Hare

Running in connection with the Victoria & Sidney Railway will sail—weather permitting and business offering—as follows:

MONDAYS—Leave Sidney on arrival of morning train, for Cowichan, Vesuvius, Bay and way ports, returning connects with evening train for Victoria.

TUESDAYS—Leave Sidney on arrival of morning train, for Ganges Harbor and way ports.

WEDNESDAYS—Leave Ganges Harbor at 6 a.m. for Sidney, connecting with morning train for Victoria.

THURSDAYS—Leave Sidney on arrival of morning train, for Ganges Harbor, Nanaimo and way ports.

FRIDAYS—Leave Nanaimo at 7 a.m. for Sidney and way ports, connecting with evening train for Victoria oc11

ESQUIMALT & NANAIMO RAILWAY.

STEAMER

JOAN

L. P. LOCKE, MASTER.

Sails as follows, calling at way ports as freight and passengers may offer:

Leave Victoria, Tuesday, 7 a.m.
" Nanaimo for Comox, Wednesday, 7 a.m.
" Comox for Nanaimo, Friday, 7 a.m.
" Nanaimo for Victoria, Saturday, 7 a.m.

For freight or staterooms apply on board, or at the Company's ticket office, Victoria station, Store street. ap25

THE BRITISH SHIP

"ILALA,"

1375 Tons Register,

Will Sail from Liverpool for Victoria

ABOUT THE MIDDLE OF DECEMBER,

Following the "Glenalvon." Cargo may be engaged and further particulars obtained on application to the undersigned.

oc29-tf R. P. RITHET & CO., LTD.

"ST. ANDREW & CALEDONIAN SOCIETY." Society meets in Caledonia Hall, Blanchard street, on the first Friday in every month. Visiting brethren are invited to attend. E. C. Smith, Secretary. ap4-1

MODERN DOORWAYS.

IN WHICH ARTISTIC GRILLES PLAY A DECORATIVE PART.

How to Make a Plain Spindle Grille For a Narrow Doorway—A Grille Made of Fishnet—A Colonial Grille Adapted to a Double Doorway.

The designs for grilles are an unlimited number, and the materials from which they may be constructed are also numerous, the most serviceable, however, being iron, brass, copper, wood of every kind, glass, fiber, netting, rope, wire and paper. Of these, metal and wood are best.

A simple and neat spindle grille for a narrow doorway is the plain spindle. Obtain two square sticks as long as the width of the doorway casing and two the desired height of the grille, of pine

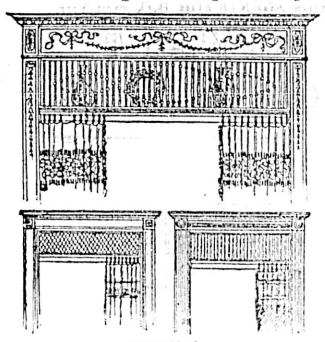

COLONIAL. FISHNET. PLAIN SPINDLE.

or whitewood seven-eighths of an inch square and planed on all four sides. Then obtain some long sticks one-half an inch square planed on all sides. These may be cut in lengths according to the desired height of the grille, and the ends made fast in the top and bottom rib of the framework. Then lay the two long sticks of the frame side by side on the top of a table, and with a rule mark off even spaces through the middle of each stick 1½ inches apart. When the spaces are all marked off, bore holes with a half inch bit, using each mark in the center of the stick for the middle of a hole; then, with a light chisel having a sharp edge, cut the holes square. The Ladies' Home Journal, the source of this information, gives an illustration in which 1 shows a section of the marked stick, 2 a hole and a square marked around it with lead pencil, and 3 shows a hole cut square; also one end of a spindle inserted in the frame piece.

To make a fishnet grille as suggested by the authority quoted make a framework of wood sticks three-quarters of an inch square to fit the inside of the door casing and obtain some fishnet made of stout cord, with small meshes, and cut from it a piece to fit the inside of the frame; then it should be shellacked to stiffen it. When cutting the net, care should be taken to have the outside row of knots intact. The net is to be made fast to the frame with staples driven through the knots, and so on into the wood as in 4, and should be stretched taut to look well. The woodwork should be finished to match the color of the door and casing, and the net can be painted any color desired. The knots will look well if gilded. A stylish appearance may be secured by painting the network a dead black before gilding the knots, or the net will look well if bronzed.

The framework of the colonial grille is made of pine or whitewood sticks seven-eighths of an inch square, the

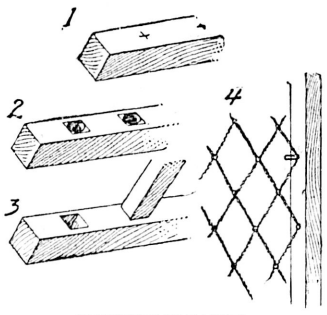

IN PROCESS OF MAKING.

spindles to be round, three-eighths or half an inch in diameter. Ordinary dowels are admirably adapted to this purpose and can be purchased from a cabinet maker. You may find them somewhat rough, but by the use of sandpaper a smooth surface may be obtained. The balls that are arranged on the spindles and work out the elliptical design can be made by a wood turner, and should have a hole through them so they will fit over the spindles and be moved to any position.

Turnips With Cream Sauce.

Pare and cut in slices enough turnips to fill an ordinary vegetable dish, boil for 30 minutes, then drain through a colander before putting into a dish. Melt a tablespoonful of butter, being careful not to brown it. Add a tablespoonful of flour and mix until smooth; then add one-half pint of equal parts sweet milk and cream. Stir continually until it boils. Season with salt and pepper. Pour over turnips and serve at once.

Cold Loaf For Lunch.

Place in a mold small irregular pieces of cold cooked meat and slices of cold hard boiled eggs. When the mold is full, pour over all a cupful of well seasoned, strong, savory stock, thick enough to jell when cold; cover and bake in a gentle oven for half an hour. When quite cold and solid, turn out of mold and serve in thin slices.

Egg Cornmeal Bread.

Two well beaten eggs, a cup of sweet milk, a teaspoon of salt, one-half teaspoon of soda, a heaping cup of cornmeal; mix well; then add a cup of buttermilk, another cup of meal and a tablespoon of melted lard. Beat well and pour into a very hot greased sheet iron pan and bake in a hot oven.

MIXED SCHOOLS.

To the Editor:—I hope you will be able to find space to insert in the Colonist a few words from me on the subject of Mixed Schools.

An experience of teaching in the High and Public schools of this province extending over ten years has caused me to form the opinion that not only does no evil result from the association of the sexes in one schoolroom, but that boys and girls are mutually benefited by being thus thrown in contact. The boys, especially, are benefited by the training they receive in politeness and courtesy to their fellow-pupils of the other sex, while the girls receive an access of dignity and womanliness from their harmless association with well-mannered boys.

If the Bishop of Columbia hear the testimony of teachers who have spent many years amongst the youth of Canada, he will be delighted to learn that his fears about the dangers of mixed schools are groundless. A comparison of London, or even Southampton, with small Canadian cities would be misleading. In London without doubt, in Southampton probably, there exists a pauper and criminal class sending to the public schools children brought up with vicious surroundings, and whose example would certainly taint any school with immorality. Here, in Canada, we have no such class, and the Lord Bishop's Canadian friends maintain the existence of the "hoodlum" element, I think it will be found that the "hoodlums" of Victoria are not altogether, or even principally composed of public school boys. certainly they are not represented in the High school. Let the Bishop of Columbia visit the schools and see for himself. He will then be in a position to judge whether my designation of the boys as "well-mannered" is an exaggeration or not. Let him enquire, as I have done, of the other teachers of our schools, whether they approve of mixed schools, and, after having received the same answers as I received, that they know of nothing but good resulting from the association of the sexes in the schools, let him consider whether our testimony is worthy of credence, whether we have or have not had opportunities of judging, and whether we have or have not the interests of our pupils at heart.

I, for one, will yield to no one in anxiety for the welfare of the young people of Victoria, and if I saw that the system of mixed schools was evil, I should certainly denounce it with all the power I have. Let His Lordship ask the inspectors of schools of this province for their opinion. I am sure that, if they were to report that it is an evil system, the Department of Education nor school boards of this province would recognize its "necessity," as Her Majesty's inspectors are reported to have done, but would pluck it up, root and branch.

In conclusion, I would respectfully beg His Lordship the Bishop of Columbia to visit the schools from time to time. He need not fear that his visit would interrupt our work. On the contrary, if the clergy of Victoria and others interested in education would visit the schools and speak a few words of advice and encouragement to the scholars, both teachers and pupils would be stimulated to fresh exertion, and the visitors themselves might find that they had been misled in their previous judgments.

Edward B. Paul,
Principal of High school.

Insure your plate glass. Mellor. *

HOTELS AND RESTAURANTS.

THE LAKESIDE HOUSE,
—AT—
COWICHAN LAKE
[The Most Charming Summer Resort in B.C.
Excellent Fly Fishing, Boating and Scenery
Stage leaves Duncan's Mondays, Wednesdays and Fridays. Fare for round trip, $3.50.
PRICE & JAYNES, - - PROPRIETORS.
my14

THE BANK EXCHANGE.
MERCHANTS LUNCHEON, 15c.
From 11:30 to 2:30.
MEALS AT ALL HOURS.
Private dining-rooms up-stairs. The coslest, cleanest and cheapest dining-room in the city.

For 20 Years
the formula for making Scott's Emulsion has been endorsed by physicians of the whole world. No secret about it. This is one of its strongest endorsements. But the strongest endorsement possible is in the *vital strength* it gives.
Scott's Emulsion
nourishes. It does more for weak Babies and Growing Children than any other kind of nourishment. It strengthens Weak Mothers and restores health to all suffering from Emaciation and General Debility.
For Coughs, Colds, Sore Throat, Bronchitis, Weak Lungs, Consumption, Blood Diseases and Loss of Flesh.
Scott & Bowne, Belleville. All Druggists. 50c. & $1.

MEN OF ALL AGES
may be cured. We treat all sexual disorders of men. Four out of five who suffer nervousness, mental worry, attacks of "the blues," are but paying the penalty of early excesses. The dread alarm of Impotency, the exhaustion of Spermatorrhœa, may be CURED in *strict confidence* at *moderate expense*.
Send for our *free* sealed book, "PERFECT MANHOOD."
ERIE MEDICAL CO., Buffalo, N.Y.

GREAT CÆSAR!
Had to "Grin and Bear It" when he had a pain. You can grin and banish it at once by using Perry Davis'
Pain Killer
Sold and used everywhere. A whole medicine chest by itself. Kills every form of external or internal pain.
Dose—A teaspoonful in half glass of water or milk (warm if convenient).

TWO MONTHS FOR NOTHING! TWO MONTHS FOR NOTHING!

THE SEMI-WEEKLY COLONIST.
$1.50
FROM NOW UNTIL DECEMBER 31ST, 1896.

THE PIONEER NEWSPAPER

SETS THE PACE.

Commencing with this date The Semi-Weekly Colonist will be mailed to any address in Canada or the United States for $1.50 per annum, and as an additional inducement to present subscribers to renew, and to introduce the paper to new readers, The Semi-Weekly Colonist will be mailed from now until December 31st, 1896, for the price of one year's subscription—$1.50—payable invariably in advance.

SUBSCRIBE NOW

AND SECURE 14 MONTHS FOR $1.50.

The Semi-Weekly Colonist is issued on Mondays and Thursdays, in time for all out-going mails, and by this means out-of-town readers will be placed in closer touch with the Capital than was possible under the old method of publishing on Fridays only. The Semi-Weekly Edition is an eight-page six-column paper, and contains the Latest Local, Provincial and Foreign News up to the time of going to press.

—THERE IS SOMETHING IN IT FOR EVERYBODY.—

The Ladies are not neglected, for Fashion Articles and Illustrations, what is going on in woman's world, and an Entertaining Story, form a part of its contents. It is in the highest sense a CLEAN AND INSTRUCTIVE FAMILY NEWSPAPER, and should be read by everyone in British Columbia.

SUBSCRIBE NOW AND GET TWO MONTHS FOR NOTHING.

CLUB OFFERS

We have the following CASH PREMIUMS to offer to any persons who may choose to turn their spare moments to profitable account by soliciting subscriptions to The Semi-Weekly Colonist:

FOR 5	NEW	SUBSCRIBERS....	$ 2.50	CASH
" 10	"	"	5.00	"
" 20	"	"	10.00	"
" 50	"	"	25.00	"
" 100	"	"	50.00	"
" 200	"	"	100.00	"

Or 50c. each for 5 subscriptions or over.

Anyone sending $4.50 in cash and the names of three subscribers will receive one year's subscription to The Semi-Weekly Colonist FREE.

The above also includes the offer from date up to the 31st December, 1896. Cash in all cases must accompany orders.

ADDRESS—
The Colonist Printing & Publishing Co.,
VICTORIA, B.C.

TRANSPORTATION.

CANADIAN PACIFIC RY.

SOO PACIFIC RAILWAY.
The only Transcontinental Line running through trains
BETWEEN THE PACIFIC AND ATLANTIC
PASSING THROUGH 600 MILES OF THE GRANDEST SCENERY IN AMERICA.
The only direct route to the Cariboo and Kootenay Gold Fields.
The shortest and quickest route to
ST. PAUL, MINNEAPOLIS, KANSAS CITY, OMAHA, CHICAGO, ST. LOUIS,
AND ALL EASTERN UNITED STATES POINTS
Tourist cars to St. Paul Toronto, Montreal and Boston without change.
Rates Cheaper Than via Any Other Line.
Passengers booked to and from all European and American Points at reduced rates.
For guides, sailing lists and all information apply to
GEO. McL. BROWN, Dist. Pass. Agt. Vancouver.
GEO. L. COURTNEY, Agent, Cor. Fort and Government Sts., Victoria.

General Steamship Agency.
THROUGH TICKETS
To and From all European points.
FROM MONTREAL.
Allan Line.....Mongolian.....Nov 16
Dominion Line.....Vancouver.....Nov 16
Beaver Line.....Lake Winnipeg...Nov 13
".....Ontario.....Nov 20
FROM NEW YORK.
Cunard Line.....Etruria.....Nov 16
".....Campania.....Nov 23
White Star Line.....Germanic.....Nov 20
".....Teutonic.....Nov 27
North Ger. Lloyd.....Werra.....Nov 16
".....Havel.....Nov 19
Red Star Line.....Friesland.....Nov 20
".....Kensington.....Nov 27
American Line.....Paris.....Nov 20
".....St. Louis.....Nov 27
Anchor Line.....Anchoria.....Nov 16
".....Ethiopia.....Nov 30
Allan State Line.....State of California, Nov 23
Saloon fares from $40 to $90, according to steamer and location of birth. Second cabin, $25 to $40. Steerage, $16 to $25. Passengers purchasing through tickets save from $5 to $10 on each fare. Parties wishing to send for their friends can save $10 by purchasing through tickets here. For sailing list, steamer accommodation and all information, apply to
GEO. L. COURTNEY, Agent, Victoria,
Cor. Fort and Government Sts.

ESQUIMALT & NANAIMO R'Y.
TIME TABLE NO 25
To take effect at 8 a.m. on Monday, October 28, 1895. Trains run on Pacific Standard Time.
GOING NORTH.

	Daily.	Sat'dy.
	A M.	P.M.
Lv. Victoria for Nanaimo and Wellington	8 00	3.20
Ar. Nanaimo	11.40	6.38
Ar. Wellington	12.00	6.55

GOING SOUTH.

	Daily.	Sat'dy.
	A.M.	P.M.
Lv. Wellington for Victoria	8.20	3.30
Lv. Nanaimo for Victoria	8.40	3.45
Ar. Victoria	12.20	7 00

For rates and information apply at Company's offices
A. DUNSMUIR, President. JOSEPH HUNTER, Gen'l Supt.
H. K. PRIOR Gen'l Freight and Passenger Agent.
oc29

VICTORIA & SIDNEY R'Y
Trains will run between Victoria and Sidney daily as follows:
Leave Victoria at.... 7:00 a.m., 4:00 p.m.
Leave Sidney at.... 8:15 a.m., 5:15 p m.
SATURDAYS AND SUNDAYS.
Leave Victoria at.... 7:00 a m., 2:00 p.m.
Leave Sidney at.... 8:15 a.m., 5:15 p m.
T. W. PATERSON.
Manager

BY WAY OF
MINNEAPOLIS AND ST. PAUL
AND OVER
The North-Western Line
Is the best route in every respect to
CHICAGO
and all points East,
KANSAS CITY, OMAHA, SIOUX CITY
and all points South. Direct connections in Union Depots. Vestibuled Trains, Compartment Buffet, Pullman and Dining Cars on every train. All ticket agents can sell you to your desination over "The North-Western Line."
F. W PARKER, Puget Sound Agent Seattle

SHORTHAND.
Pitman's system, taught in twenty-five lessons for $25. Proficiency Guaranteed. Address 3 Centre Road, Spring Ridge. apl

THIS PAPER
IS ON SALE AT THE FOLLOWING PLACES IN THE UNITED STATES:
SAN FRANCISCO—
Palace Hotel News Stand.
L. P. Fisher, Room 11, Merchants' Exchange.
SEATTLE—
A. T. Lundberg & Co., 2d and Pike streets.
J. T. Riggs, P.O. News Stand.
Ward's News Stand, 109 Columbia.
Allair & Staemfli, 104 S. 2d street.
Butler Hotel News Stand.
Rainier Grand News Stand.
Norther Hotel News Stand.
Lowman & Hanford, 616 Front street.
The Calvert Co., 716 Front street.
Gillman News Stand, Yesler avenue and Commercial street.
Taft & Clark, 2d and Madison streets.
Standly, W. P., 518 2d street.
Sutton & Allen, 2d street.
Arlington Hotel News Stand.
The Puget Sound News Company.
TACOMA—
News Stand, Tacoma Hotel.
Funk's Book Store, corner 11th street and Pacific avenue.
PORT TOWNSEND—
French & Springer's.

RAILWAYS.

Thos. F. Oakes, Henry C. Payne, Henry C. Rouse, Receivers.
NORTHERN PACIFIC
RUNS
Pullman Sleeping Cars
Elegant Dining Cars
Tourist Sleeping Cars
—TO—
St. Paul
Minneapolis
Duluth
Fargo
Grand Forks
Crookston
Winnipeg
Helena and
Butte
THROUGH TICKETS
To Chicago, Washington, Philadelphia, New York, Boston and all Points East and South.
TIME SCHEDULE.

Speed 18 knots		VICTORIA ROUTE. S.S. "CITY OF KINGSTON"		Tonnage 1117.
8.30 pm	M	Lv *...Victoria.... Ar	10	4.30 pm
11.45 pm	33	. Port Townsend .	72	1.30 pm
3.00 am	82	..... Seattle.....	28	10.15 am
4.45 am	10	Ar. *...Tacoma.....Lv	M	8.00 am

Steamer City of Kingston makes connection at Tacoma with Northern Pacific trains to and from points east and south.
* Daily except Monday.
E. E. BLACKWOOD, Freight and Passenger Agent Victoria, B. C.
A. D. CHARLTON, Asst. Gen. Pas. Agent, 255 Morrison St., cor. Third St., Portland, Or.
ap2

GREAT NORTHERN
RAILWAY
THE SHORTEST AND QUICKEST LINE
—TO—
KOOTENAI COUNTRY
St. Paul, Minneapolis, Duluth, Chicago, New York, Boston,
AND ALL UNITED STATES POINTS.
Toronto, Hamilton, Montreal, Quebec,
AND ALL EASTERN CANADIAN POINTS
Daylight run over the Cascade and Rocky Mountains—the Grandest Scenery in America. Superb Buffet and Elegant Dining, Palace Sleeping and Cosy Tourist Cars. Enjoy a delightful ride, free from heat and dust in all seasons.
For tickets, etc., see H. MARTIN, Gen. Agent, Government Street.

Chicago, Milwaukee & St. Paul Ry.

GLANCE AT THIS MAP
Of the Chicago, Milwaukee and St. Paul Railway and note its connections with all transcontinental lines at St. Paul and Omaha, and remember when going east that its trains are lighted with electricity and heated by steam. Its equipment is superb. Elegant Buffet, Library, Smoking, and Sleeping cars, with free reclining chairs. Each sleeping car berth has an electric reading lamp, and its dining cars are the best in the world. Some other lines are longer than this, but none are shorter and no other offers the above luxurious accommodations. These are sufficient reasons for the popularity of "The Milwaukee." Coupon ticket agents in every railroad office will give you further information, or address
C. EDDY, General Agent,
J. W. CASEY, Trav. Pass. Agent, Olympic Block, Seattle

Spokane Falls & Northern Ry
NELSON & FORT SHEPPARD RY.
ALL-RAIL TO NELSON, B.C.
THE ONLY THROUGH LINE TO NELSON, KASLO, KOOTENAI LAKE AND SLOCAN POINTS.
Daily, except Sunday, between Spokane and Northport.
Tri-weekly between Northport and Nelson.
7:00 a.m. Lv...SPOKANE...Ar. 6:50 p.m.
On Tuesdays, Thursdays and Saturdays trains will run through to Nelson, arriving at 5:40 p.m. making close connection with the steamer Nelson for Kaslo and all lake points, arriving at Kaslo at 9:00 p.m. same days. Returning passengers will leave lake points and Nelson on Mondays; Wednesdays and Fridays, arriving at Spokane same days.
Passengers for Kettle River and Boundary Creek connect at Marcus with stage on Mondays, Wednesdays, Thursdays and Fridays.
For Trail Creek Mines, connect at Northport with stage daily.
For Nakusp and Revelstoke, connect at Northport with boat on Wednesdays and Saturdays. jal

GEO. A. SARGISON
NOTARY PUBLIC,
Accountant & Agent,
48 LANGLEY ST.

Highest of all in Leavening Power.—Latest U. S. Gov't Report

Royal Baking Powder

ABSOLUTELY PURE

THE THERMOMETER.

ESQUIMALT STATION, Nov. 15, 1895.
Report for 24 hours ending 9 p.m.

1 a. m.,	52°	Mean 53°	The velocity and direction of the wind were as follows:
5 a. m.,	54°		
9 a. m.,	51°	Highest 58°	5 a. m.—10 S.
1 p. m.,	56.		1 p. m.—8 S.
5 p. m.,	57°	Lowest 50°	9 p. m.—6 S.
9 p. m.,	50°		Rain—.49.

Average state of weather—Cloudy.
Sunshine 1 hr., 18 min.
E. BAYNES REED, Observer.

Don't Trust in Luck

To direct you to a thoroughly reliable Drug Store when in need of drugs. Be guided by the experience of others and go to JONES, near the new Post Office. **He Sells Pure Drugs. Always Open.**

PASSENGERS.

Per Steamer ROSALIE from Seattle—E Pitts, A Cunningham and wife, J W Casey, W J Burke, A Morkill, A Tichnor and wife.

Per Steamer CHARMER from Vancouver—W A Ward, J Grant, Mrs Wextram, J H Featherstone, E V G Todd, C K Rollings jr. W R Creech, H Carmichael, J Van Tarrel, Supt Hussey, F W Groves, W F Bullen, Rev P H McEwen, W A Lorimer, Thomas Allice, Dr Langis, N S Hoffar, Miss Shatter, Mrs Malone, W Burton, J M Palmer, Miss Palmer.

CONSIGNEES.

Per steamer ROSALIE, from Seattle—T H Tye, H E Levy.

Per Steamer CHARMER from Vancouver—R P Rithet, Turner B & Co, Lowenberg & Co, Bradstreet Co, Fred Norris, Weiler Bros, J Piercy, S Shore, H Clarke, G C Mesher, W Jackson, T B Pearson, T Shotbolt, Langley & Co, Johns Bros, E J Saunders, W Wilson, Simon Leiser, E B Marvin, W C Jennett, Lenz & Leiser, G R Jackson, T G Mason, J Fullerton, Ames Holden Co, G & McG, Col Ind Rev, J H Todd, Vic Elec Co W Duncan, S Reid Hall & Co, J & A Cleathue, T N Hibben, G C Hinton, Ramsay Bros, R J Nott, Vic Chem Wks, W Lough, Walsh Bros, White & Sloan, Dom Exp Co.

CUSTOMS BLANKS And Commercial Forms of all kinds at the Colonist Office.

DIED.

MALLANDAINE—On the 11th inst., Frederick, second son of Edward and Louisa Mallandaine, and grandson of the late Colonel Mallandaine, H.E.I.C.S., aged 27 years.

The funeral will take place on Saturday, at 2:30 p.m., from the family residence, No. 19 Simcoe street, and at 3 o'clock at St. James church. Friends will please accept this intimation.

MEMORIAL Cards and Stationery. New Styles at the Colonist Office

AN AUTUMN DAY'S SPORT.

The Navy to Again Engage the Victoria Club at Rugby—"Association" at the Hill.

At the Caledonia grounds this afternoon the sturdy representatives of the Navy and of the Victoria Rugby Football Club will meet in their second match of the season—a game, by the way, which promises to be a thoroughly hard fought and interesting one. The Navy have not made any material change in the composition of their team, though several changes in position will considerably increase its strength and effectiveness. For the home club the following are announced to play in the positions assigned: K. Scholefield, back; J. F. Foulkes, J. M. Miller, C. Gamble and J. S. Byrn, three-quarters; J. Smith and C. W. Ward, halves; J. K. Macrae, H. Austin, A Langley, L. Crease, A. Crease, J. R. G. Bullen, A. T. Gamble and A. B. Spain.

Y. M. C. A. V. WANDERERS.

Of the Association events of to-day the most conspicuous is the match between the Y.M.C.A.'s and the Junior Wanderers, which is to be played on the College ground at half-past two. Here are the teams selected for the engagement:

Y. M. C. A.—Goal, McCrossan; backs, Dallas and Cullin; half-backs, Scott, Fowkes and Cusack; forwards, right wing, Booth and Lorimer; left wing, W. York and L. York, centre, F. Cullin; reserves, Snider and Norris.

Junior Wanderers—Goal, Wriglesworth; backs, Goward and Dallas; half-backs, Falconer, Peden and Winsby; forwards, Johnston, McCann, Paton, G. Wilson and Shandley.

THE HUNT.

TO-DAY'S RUN ARRANGED.

The Hunt Club will meet to-day at 2:30 sharp for their second run of the season, the muster being at Mr. F. B. Pemberton's residence on the Foul Bay road. His Excellency the Governor-General and the Lady Marjorie have been invited to participate in the run, which promises to be very numerously attended.

HERE AND THERE.

GENERAL GOSSIP OF CURRENT EVENTS.

The committee in charge of the Thanksgiving Day rifle match have decided to offer prizes at 200, 500 and 600 yards, and that the day's programme shall be entered upon at 10 o'clock sharp.

Jake Gaudaur has challenged John Hackett, of Rat Portage, to a three-mile race, with turn, for $1,000 a side and gate receipts, or for whatever purse is put up, the race to take place on any course Hackett may name.

Yesterday's feature of the Derby November meeting was the Derby cup, 2,000 sovereigns, a handicap event for three year olds and upwards. The distance was one mile straight, and 22 horses started. The result was: Laodamia first, Count Ball second, Red Heart third.

In the tug-of-war tournament at Seattle yesterday Tacoma's firemen won from Victoria by four inches, and were in turn outpulled by Seattle on the bare margin of a quarter of an inch.

Many people, when a little constipated, make the mistake of using saline or other drastic purgatives. All that is needed is a mild dose of Ayer's Pills to restore the regular movement of the bowels, and nature will do the rest. They keep the system in perfect order.

Fresh Eastern Oysters

Direct from Montreal at Fell & Co., Fort street, taken from cold storage daily. x

THE CORPORATION COURT.

Other Employees Tell What They Know and Have Seen of Superintendent Hutchison.

A Witness Who Would Steer Clear of Aldermen—Several Mistakes in the "Charges."

Standing room only was obtainable, and even that was hard to find, in the space set apart for the public in the city council chamber, long before the acting Mayor, Alderman Humphrey, called his colleagues to order at 8:15 o'clock last evening. The board of aldermen met, according to the resolution of the previous meeting, as a select committee, for the purpose of hearing on oath the witnesses in the matter of Electrical Superintendent Hutchison. All the aldermen were present. The large audience included all ages and classes of citizens.

THE CHAIRMAN announced that the order of business would be first to take all the evidence, without any speeches—the aldermen, however, having the right to ask questions through the chair. After the addresses of the counsel—Mr. Belyea for the Superintendent, and Mr. Mason for the Corporation—he proposed to adjourn the proceedings until Monday evening, when the report could come up at the regular meeting of the council.

By request of the City Solicitor Ald. Bragg sat beside him as prompter—Mr. Belyea and his client making with them a quartette at a table below the Mayor's chair.

THE ENGINEER.

Thomas Carson, engineer at the electric light works, was first called, and being duly sworn by the Chairman was examined by Mr. Mason. He said he had been four years in the corporation employ and had had seven or eight years' experience. Mr. Hutchison is chief engineer.

Mr. Mason—How long has he been chief engineer?

Witness—From the date of his appointment. (Laughter.) The witness identified his report respecting the attendance of Mr. Hutchison at the station during the three weeks covered by the report, which he had made by direction of the electric light committee. He attested the correctness of his statements line by line; and things went smoothly until it was discovered by Mr. Belyea that there were two reports, not quite the same. Witness explained that the additional information in one of them was kept on pieces of paper. He corrected the report by changing "a.m." in one of the headings, to "p.m.," and declared that otherwise it was right.

To Ald. Bragg witness said he remembered the dynamo running the Devonshire road circuit having been out of repair—he thought for about a month. It ought to have taken about a couple of days to repair. He thought it was at the tramway shops during the time; he knew no reason why it was not immediately repaired. The Fort street armature being out of order was taken from the station to Langley street. It was perhaps four or five days out of the station. The three months previous to October were about the same as the period he had reported on, with respect to Mr. Hutchison's attendance.

To Ald. Wilson witness said he did not know whether the materials for repairing the armatures could be got in the city.

To Ald. Macmillan witness was not prepared to state whether or not he could wind an armature—if it was put before him probably he could. (Laughter.) He might do it if the proper facilities were there. The commutator was short-circuited.

Ald. Macmillan—"If you asked an applicant for the position of running your engine, whether he knew how to do it, and he said he guessed he could, would you give him the job?"

Witness—(emphatically)—"No; I would not." (Laughter).

Mr. Belyear then cross-examined the witness: "Tell us what you known about electricity?"

Witness—"I would like something more definite; that covers a great deal."

Mr. Belyea—"Then you know a great deal?"

Witness—"Well, I know a little."

Mr. Belyea—"How little, then?"

Witness—"Well, considerable." He had been in charge a considerable time and had been three years on Langley street. He did not there wind armatures, but repaired ordinary breakages, connections, soldering and the like. There is no place at the city lighting station for repairing dynamos or no set of tools, and a complete job cannot be done without sending the part to the machine shop. On the 7th of October when the Fort street armature broke the superintendent was absent as far as witness saw, but he could come into and go out of his office without being seen by witness He had never learned who was in charge when Mr. Hutchison was not there. His own hours were only when the lights are burning, and about an hour before and after. Mr. Hutchison appeared to be required only once during the month when he was not there, and that was on the 7th, when the accident occurred; he could not, however, have repaired the armature the same night, and the work was done next day, witness did not know by whom. When he made the statement in his report that he left a note asking for oil, in the superintendent's office on the 26th, and it was still there on the 28th, he knew that the intervening day was Sunday. He had met Mr. Hutchison on the street on Saturday at 4 p.m. and told him about leaving the note at 4 a.m., saying at the same time that he had enough oil to do until Monday. A barrel came on Monday, but it was from San Francisco. There was another order waiting at Mr. Hutchison's door from the foreman of the lamp trimmers.

Mr. Belyea—"You were at the Langley street station. You left there rather unceremoniously, did you not?"

Witness—"Not quite so."

Mr. Belyea—"Have you had any difficulty with Mr. Hutchison at the electric light station?"

Witness—"No."

Mr. Belyea—"Were you not suspended for flooding the boilers?"

Witness—"Not for flooding the boilers, but for being the cause, as was said, of the boilers being flooded—an entirely incorrect statement."

To Ald. Macmillan, witness said that when he made the report about the order for the oil being under Mr. Hutchison's door from the 26th to the 28th, he did not mean to mislead, but must have overlooked mentioning the fact that he met the superintendent on the street on the 26th.

To Ald. Wilson witness declared that at the time of the first shipment of coal to the electric light station he had received no instructions from Mr. Hutchison about repairing a hole in the wharf near the embankment; and had he not done so on the order of Ald. Wilson the coal would have slid into the water.

THE POLICEMEN.

Constable William Clayards was next called and sworn, stating to Mr. Mason that he had been eight months on the force. In obedience to orders he commenced on October 15 to keep a watch on Mr. Hutchison, in conjunction with Constable Anderson, who wrote the joint reports they had both signed. Each report was written out on the evening of the day mentioned, and is true in every particular.

To Mr. Belyea witness said he got his instructions from Acting Chief Walker, and talked to no one else about his reports before he made that of the 26th October.

Mr. Belyea—"That is the day, you know, your imagination got away with you." (Laughter.)

Witness—"That's in your opinion, sir." (Renewed laughter.)

Mr. Belyea—"About your report, where you say you had suspicion that certain wire belonged to Cunningham & Hinton, what caused you to think that?"

Witness replied that it was when he saw the wire being put into a private warehouse; he thought that would be strange if it were city property. He thought he was justified in mentioning his suspicions because the report was a strictly confidential one to his chief. He mentioned Cunningham & Hinton's name because he saw Mr. Hutchison coming out of their office so often. If he had been employed longer on the case he would have made it his business to find out who owned the wire.

Mr. Belyea—"Why did you depart in this single instance from the plain statement of what you saw him do?"

Witness—"I can't answer the question."

Ald. Macmillan—"You were not sent to watch Cunningham & Hinton. Do you think you had the right to cast suspicion on respectable business men when not sent to watch them?"

Witness—"Yes, while on this case."

Ald. Macmillan—"On any citizen?"

Witness—"Not at all, sir."

Ald. Macmillan—"Your right was confined to Cunningham & Hinton only?"

Witness—"Yes." (Laughter.)

Constable William Alexander Anderson, for three months in the city's employ, corroborated officer Clayards' evidence with respect to the method of making up the reports. He didn't hide on the Gorge road, he said, but "just got behind the bush." (Laughter.) To Ald. Macmillan witness said that he did not remember writing in the report that one night he was tired when he quit watching Hutchison, having lost him in the darkness, "but if you find it there it's all true." (Laughter and applause.) He couldn't say whether Hutchison also might not be expected to be tired. "I was watching him, you know, for about three and a half hours before he got up." (Laughter.) He could not say whether or not Hutchison was properly employed when he saw him—that was not in his orders (laughter), which simply were to keep the time when he saw him. This he did very carefully, for he had a good watch. He had never done any work of this kind before. (Laughter.) This witness retired amidst great applause from the public, because of the manner in which he turned off any question going beyond his "orders."

THE DYNAMO TENDER

John Roberts, dynamo tender at the city electric light works, and in the employ of the city since 1886, said he took his orders from Mr. Hutchison; the attendance of the latter was, he believed, as stated in the report made by engineer Carson. Mr. Hutchison's office is above the storeroom, and the dynamo room being nearly always open that would be the way he would naturally come in. He did not know of any instance, during October or any other month, when the superintendent appeared to be required but was not there. The former superintendent, Mr. McMicking, used to repair the armatures at the old works on Yates street, where the tools and appliances still are. He thought that Mr. McMicking would have in one day repaired the Devonshire road circuit armature, which Mr. Hutchison allowed to lie on the floor for five or six weeks. The Fort street circuit commutator might have been repaired in the Langley street station on Mr. Hutchison's lathe, but it was sent to Spratt & Gray's. On cross-examination, he would not say positively that it could be done on Langley street. Witness felt quite competent to do all the needed repairs himself if he had instructions to do so.

Constable Thomas Kavanaugh, two years a city police officer, said he had been appointed by the Chief to make a report on Mr. Hutchison, and did so, on the 25th of October; this report he identified. He was on watch for two days, but never saw the man. (Laughter.)

Mr. Belyea—You had a soft snap; I guess we'll pass you. (Applause.)

THE LAMP TRIMMERS.

Andrew Gibson, foreman lamp trimmer and repairer, having been busy with his own business had not looked after the superintendent. (Laughter.) He simply did his own work, and paid no attention to the council or the superintendent either. (Laughter.)

To Mr. Belyea witness said Mr. Hutchison rode round with him three or four times and told him to take charge of the lamps. He had not told Ald. Bragg that he had never seen the superintendent when at work—that was not what the Alderman asked him. He was asked whether he had seen the superintendent working at his end of the line—which is out in the outskirts and in the cow pastures. (Laughter.) He had not said, as stated in Ald. Bragg's report, that he had never seen Mr. Hutchison while on duty, either at the station or on the line. He could not say such a thing, for it would not be true.

Questioned by Ald. Bragg, the witness had some hesitation in stating what the lamp-trimmers do first thing in the morning, but the first duty he required them to do was to turn up at the station about eight o'clock. He didn't give them any particular instructions; he just told them to get a sack of carbons and get out. (Laughter.) He kept no check of the carbons, because the men could not eat them—(laughter)—or make away with them in any way but putting them in the lamps.

Ald. Bragg—"Didn't you try to evade me when I first questioned you on this business?"

Witness—"You're right there. I didn't want to be mixed up in the council business. I did want to get away from you." (Great laughter.)

To Ald. Wilson witness said they had never run out of carbons when in the old station; but in the new they had once or twice to make shifts by using a different size of carbon. He remembered the night the pole was afire on Store street; he did not know that they were hunting all round to find the superintendent and could not—"I know a policeman found me, and I fixed it." (Applause.)

Henry Jewell, lamptrimmer for the past three months, had never met the superintendent at the station when he went there at 8 in the morning, but when reporting at 4 in the afternoon had seen him three or four times. The carbons are kept in a box in the storehouse; there is no check on the number taken out, but he knew of nothing that could be done with them except put them in the lamps. The superintendent had told him in a general way where his circuit would be. He had a few times, perhaps two or three, perhaps more, met the superintendent on his circuit, but that is largely on the outskirts of the city. He had on one occasion got instructions from the superintendent.

To Mr. Belyea witness said he could not have made to any person such a statement as that he had never seen the superintendent on duty at any time. His "boss" is Mr. Gibson; he has nothing directly to do with the superintendent.

Walter John Wriglesworth, lamp-trimmer for about fifteen months, had several times—eight, ten or a dozen—seen the superintendent on his circuit, since last July; and used to meet him nearly every day at the station about two o'clock.

Fred. Widdowson, lamp-trimmer since the first of July, had often—every other day, probably—met the superintendent at the station between four and five o'clock in the afternoon and Mr. Hutchison had also been out with him on duty three times.

At eleven o'clock the committee adjourned, to meet again at 8 p. m. on Tuesday night.

Awarded
Highest Honors—World's Fair,
DR. PRICE'S CREAM BAKING POWDER
MOST PERFECT MADE.
A pure Grape Cream of Tartar Powder. Free from Ammonia, Alum or any other adulterant.
40 YEARS THE STANDARD.

W. H. Ward.

Almost a Hopeless Case.

A Terrible Cough. No Rest Night nor Day. Given up by Doctors.

A LIFE SAVED BY TAKING

AYER'S CHERRY PECTORAL

"Several years ago, I caught a severe cold, attended with a terrible cough that allowed me no rest, either day or night. The doctors, after working over me to the best of their ability, pronounced my case hopeless, and said they could do no more for me. A friend, learning of my trouble, sent me a bottle of Ayer's Cherry Pectoral, which I began to take, and very soon I was greatly relieved. By the time I had used the whole bottle, I was completely cured. I have never had much of a cough since that time, and I firmly believe that Ayer's Cherry Pectoral saved my life."—W. H. WARD, 8 Quimby Ave., Lowell, Mass.

Ayer's Cherry Pectoral
HIGHEST AWARDS AT WORLD'S FAIR.
Ayer's Pills the Best Family Physic.

A CORRECTION.

TO THE EDITOR:—In my letter of yesterday the word assailable was substituted for the word amiable—thereby changing the sense in a manner I should deplore. "Amiable" I maintain the workers of the W.L.C. must of necessity be; "assailable," never.
W. F. L. PADDON.

If you once try Carter's Little Liver Pills for sick headache, biliousness or constipation, you will never be without them. They are purely vegetable, small and easy to take. Don't forget this.

For a nice glass of cool beer or iced drinks call at Adelphi corner. M.C.Brown.

Reefers and Boys' Overcoats arrived today—Gilmore & McCandless. x

F. S. & C. For All Points on Puget Sound.

"F. S. & C." applied to steamer Rosalie means, fast, safe and comfortable. This new steamer leaves Victoria daily at 9 a.m., except Sundays, for Port Townsend and Seattle, arriving at Seattle at 4 p.m., connecting with steamer Flyer daily for Tacoma, and Great Northern trains for all points East and South. Returning—Steamer leaves Seattle at 11:30 p.m. daily, except Sundays, arriving at Victoria at 6:30 a.m. Local and through tickets at Great Northern R.R. office, 75 Government street. x

Boys' Overcoats, cheap—Gilmore & McCandless. x

"LYNWOOD" at A. O. U. W. hall, Saturday. x

PERRY & TURNER

42 JOHNSON STREET, VICTORIA, B.C.

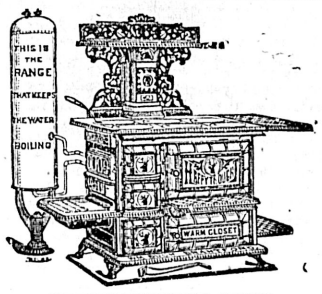

"HAPPY THOUGHT" RANGE.

Builders' Hardware,
Stoves, Tinware and Graniteware.
Sheet Metal Work,
Cornice Work,
Sky Lights and Roofing.
Plumbing and Heating no18

PEOPLE WILL HAVE
WOOD AIR-TIGHT HEATERS.

To clear out all other styles of Heating Stoves, of which we have a great assortment, we will sell at 25 per cent. discount.

SOLE AGENTS FOR B.C. FOR THE
COCKSHUTT PLOWS and HARROWS

NEW ADVERTISEMENTS.

NOTICE.

FOR SALE—WOOD, COAL, COKE AND BARK of the best quality, at current rates. Yards corner Government and Discovery streets, or Spratt's Wharf. Steam wood-sawing done in any part of the city. Stove wood for sale, cut in lengths to suit. Telephone No. 40. - A. C. HOWE. jy4-6m

"LAND REGISTRY ACT."

Lots 8 and 16, Block XI. of Part of Section 17, Range VI., (Map 209) Quamichan District.

Whereas the Certificate of Title of Frances Emma Arrowsmith to the above hereditaments, bearing date the 30th day of July, 1891, has been lost or destroyed, and application has been made for a duplicate of such Certificate. Notice is hereby given that such duplicate will be issued unless cause be shown to the contrary, in writing, within one month from the date hereof.

S. Y. WOOTTON,
Deputy Registrar-General.

Land Registry Office,
Victoria, November 15, 1895. no16-1m

AMUSEMENTS.

VICTORIA THEATRE

The management beg to announce the first production here,

Monday Evening, November 18th.

TRILBY

A play in four acts by Paul M. Potter, based on George DuMaurier's novel, interpreted by

MR. A. M. PALMER'S COMPANY.

Prices — Orchestra chairs, $1.50; Orchestra Circle and Dress Circle, $1.00; Gallery, 50c. Sale of seats will open to-morrow (Thursday) morning at 9 o'clock at Jamieson's. no13

FIRST TIME IN VICTORIA.

VICTORIA THEATRE,
Wednesday and Thursday, Nov. 20 and 21.
MATINEE THURSDAY.

First Big Production
CLEOPATRA
The Greatest Actress,
MISS LILLIAN LEWIS.
A STAR CAST.
A Dramatic Spectacle not excelled by any production given any Dramatic Composition.
CHORUS. BALLET.
All the scenery used. Cleopatra's Barge. The famous Storm Scene. Immense Tableaux Vivant. Gorgeous costumes. Panoramic views, and the greatest novelty and sensation,
THE BAREFOOT BALLET.
Prices. Orchestra chairs, $1.50; Orchestra Circle, Dress Circle, $1.00; Gallery, 50c. Matinee prices, Orchestra chairs, $1.00; Orchestra Circle, 75c.; Dress Circle, 50c.; Gallery, 25c. Matinee prices for children, Orchestra chairs and Orchestra Circle, 50c.; Dress Circle, 25c.

ANOTHER CUT

With intent to increase the number of readers of THE DAILY COLONIST in Victoria and district, the management have decided to reduce the price delivered by carrier from 25 cents to

20 CENTS PER WEEK.

The reduction to begin with the present week. By so doing it is expected that the circulation will rapidly increase. Besides the tendency of the times is to lower prices for all sorts of necessaries, and a daily paper that gives all the news, such as THE COLONIST does, is among the first.

SUBSCRIPTIONS

Will be taken by the carriers, or names and addresses may be left at THE COLONIST business office, or can be sent there by telephone.

B.C.B.G.A.

No. 2 Company Order by Major Williams Commanding.

Drill Hall,
VICTORIA, B.C., Nov. 14, 1895.

No. 2 Company will parade at the Drill Hall, on Saturday, Nov. 16, at 2 p.m., for the purpose of attending the funeral of their late comrade, Gr. F. Mallandaine.

Dress—Firing Party, Review Order.

Remainder—Church Parade Order.

Leggings will be worn, and if the weather is rainy overcoats also.

Members of the other Companies of the Battalion are invited to attend.

B. WILLIAMS, Major.
Commanding No. 2 Company.

LANSDOWNE HOUSE
86 YATES STREET

RECEIVED
CAPES
Not any two alike.

Waterproofs! Waterproofs!
With and without Golf Capes.

MILLINERY
We have goods arriving almost every day by express. Ladies can always rely upon securing
Up-to-Date Styles
—AT THE—
LANSDOWNE HOUSE
86 YATES STREET.
John Partridge, Prop.

COAL.

Our New Wellington Coal is Now Selling at

$6 PER TON.

Give us a trial and you will be convinced of its superiority. Once used, always used.

Anthracite Coal

We have now in stock a small quantity of the **Genuine Article** direct from **Pennsylvania Mines**, Specially adapted for Furnaces, Self-Feeders, Base Burners.

WOOD.
Fine and dry at market prices.

Spratt & Macaulay,
oc23-1m